Service Manual

Tektronix

Tektronix 4000 Series
Digital Phosphor Oscilloscopes

071-2137-00

Revision A

This document applies to firmware version 2.00 and above.

Warning
The servicing instructions are for use by qualified personnel only. To avoid personal injury, do not perform any servicing unless you are qualified to do so. Refer to all safety summaries prior to performing service.

www.tektronix.com

Copyright © Tektronix. All rights reserved. Licensed software products are owned by Tektronix or its subsidiaries or suppliers, and are protected by national copyright laws and international treaty provisions.

Tektronix products are covered by U.S. and foreign patents, issued and pending. Information in this publication supercedes that in all previously published material. Specifications and price change privileges reserved.

TEKTRONIX and TEK are registered trademarks of Tektronix, Inc.

TekLink is a trademark of Tektronix, Inc.

Tektronix is an authorized licensee of the CompactFlash® trademark.

Contacting Tektronix

Tektronix, Inc.
14200 SW Karl Braun Drive
P.O. Box 500
Beaverton, OR 97077
USA

For product information, sales, service, and technical support:

- In North America, call 1-800-833-9200.
- Worldwide, visit www.tektronix.com to find contacts in your area.

Table of Contents

General Safety Summary . . . . . **iii**

Service Safety Summary . . . . . **v**

Environmental Considerations . . . . . **vii**

Preface . . . . . **ix**

Manual Conventions ix

Related Documentation ix

Operating Information **1-1**

Theory of Operation **2-1**

Block Diagrams 2-1

Power Supply 2-2

I/O Board 2-2

Main Board 2-2

Front-Panel Board 2-3

Adjustment Procedures **3-1**

Required Equipment 3-1

Overview of the Adjustment Process 3-2

Factory Adjustment Procedure 3-4

Completing the Procedure 3-8

Maintenance **4-1**

Preventing ESD 4-1

Inspection and Cleaning 4-1

General Care 4-2

Interior Cleaning 4-2

Exterior Cleaning 4-2

Overview of Removal Procedures 4-6

Removal Procedures 4-8

Troubleshooting 4-12

Troubleshooting Procedure 4-13

Unpacking and Repacking Instructions 4-16

Mechanical Parts List **5-1**

Parts Ordering Information 5-1

Using the Replaceable Parts List 5-2

List of Tables

Table 4-1: External inspection check list 4-3
Table 4-2: Internal inspection check list 4-4

List of Figures

Figure 2-1: Oscilloscope module interconnections 2-1
Figure 3-1: Rear panel 3-4
Figure 3-2: Utility page menu 3-5
Figure 3-3: Calibration selection 3-6
Figure 3-4: Factory information dialog 3-6
Figure 3-5: Digital channel input 3-10
Figure 4-1: Locator for trim and cabinet removal 4-7
Figure 4-2: Locator for internal modules 4-8
Figure 4-3: Primary troubleshooting procedure 4-13
Figure 4-4: AC power supply troubleshooting procedure 4-14
Figure 4-5: Module isolation troubleshooting procedure 4-15
Figure 5-1: Exploded view, case 5-5
Figure 5-2: Exploded view: DPO4000 front panel and display, 4-channel instruments 5-7
Figure 5-3: Exploded view: MSO4000 front panel and display, 4-channel instruments 5-9
Figure 5-4: Exploded view: DPO4000 front panel and display, 2-channel instruments 5-11
Figure 5-5: Exploded view: MSO4000 front panel and display, 2-channel instruments 5-13
Figure 5-6: Exploded view: DPO4000 Power Supply and I/O board 5-15
Figure 5-7: Exploded view: MSO4000 Power Supply and I/O board 5-17
Figure 5-8: Exploded view: DPO4000 Main board, Inverter board, and side fans 5-19
Figure 5-9: Exploded view: MSO4000 Main board, Inverter board, and side fans 5-21

General Safety Summary

Review the following safety precautions to avoid injury and prevent damage to this product or any products connected to it.

To avoid potential hazards, use this product only as specified.

Only qualified personnel should perform service procedures.

To Avoid Fire or Personal Injury

Use Proper Power Cord. Use only the power cord specified for this product and certified for the country of use.

Connect and Disconnect Properly. Do not connect or disconnect probes or test leads while they are connected to a voltage source.

Ground the Product. This product is grounded through the grounding conductor of the power cord. To avoid electric shock, the grounding conductor must be connected to earth ground. Before making connections to the input or output terminals of the product, ensure that the product is properly grounded.

Observe All Terminal Ratings. To avoid fire or shock hazard, observe all ratings and markings on the product. Consult the product manual for further ratings information before making connections to the product.

The inputs are not rated for connection to mains or Category II, III, or IV circuits.

Connect the probe reference lead to earth ground only.

Do not apply a potential to any terminal, including the common terminal, that exceeds the maximum rating of that terminal.

Do Not Operate Without Covers. Do not operate this product with covers or panels removed.

Do Not Operate With Suspected Failures. If you suspect there is damage to this product, have it inspected by qualified service personnel.

Avoid Exposed Circuitry. Do not touch exposed connections and components when power is present.

Do Not Operate in Wet/Damp Conditions.

Do Not Operate in an Explosive Atmosphere.

Keep Product Surfaces Clean and Dry.

Provide Proper Ventilation. Refer to the manual's installation instructions for details on installing the product so it has proper ventilation.

Terms in this Manual

These terms may appear in this manual:

WARNING. *Warning statements identify conditions or practices that could result in injury or loss of life.*

CAUTION. *Caution statements identify conditions or practices that could result in damage to this product or other property.*

Symbols and Terms on the Product

These terms may appear on the product:

- DANGER indicates an injury hazard immediately accessible as you read the marking.
- WARNING indicates an injury hazard not immediately accessible as you read the marking.
- CAUTION indicates a hazard to property including the product.

The following symbols may appear on the product:

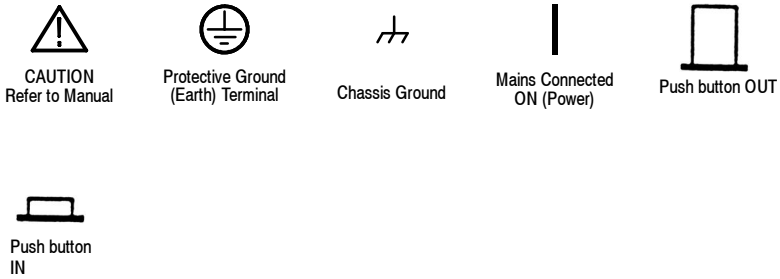

Service Safety Summary

Only qualified personnel should perform service procedures. Read this *Service Safety Summary* and the *General Safety Summary* before performing any service procedures.

Do Not Service Alone. Do not perform internal service or adjustments of this product unless another person capable of rendering first aid and resuscitation is present.

Disconnect Power. To avoid electric shock, switch off the instrument power, then disconnect the power cord from the mains power.

Use Care When Servicing With Power On. Dangerous voltages or currents may exist in this product. Disconnect power, remove battery (if applicable), and disconnect test leads before removing protective panels, soldering, or replacing components.

To avoid electric shock, do not touch exposed connections.

Environmental Considerations

This section provides information about the environmental impact of the product.

Product End-of-Life Handling

Observe the following guidelines when recycling an instrument or component:

Equipment Recycling. Production of this equipment required the extraction and use of natural resources. The equipment may contain substances that could be harmful to the environment or human health if improperly handled at the product's end of life. In order to avoid release of such substances into the environment and to reduce the use of natural resources, we encourage you to recycle this product in an appropriate system that will ensure that most of the materials are reused or recycled appropriately.

The symbol shown to the left indicates that this product complies with the European Union's requirements according to Directive 2002/96/EC on waste electrical and electronic equipment (WEEE). For information about recycling options, check the Support/Service section of the Tektronix Web site (www.tektronix.com).

Mercury Notification. This product uses an LCD backlight lamp that contains mercury. Disposal may be regulated due to environmental considerations. Please contact your local authorities or, within the United States, the Electronics Industries Alliance (www.eiae.org) for disposal or recycling information.

Restriction of Hazardous Substances

This product has been classified as Monitoring and Control equipment, and is outside the scope of the 2002/95/EC RoHS Directive. This product is known to contain lead, cadmium, mercury, and hexavalent chromium.

Preface

This service manual provides information that you need to troubleshoot, disassemble, and replace parts on the Tektronix 4000 Series Digital Phosphor Oscilloscopes.

Manual Conventions

This manual uses certain conventions that you should become familiar with before attempting service.

Modules

Throughout this manual, any replaceable component, assembly, or part is referred to by the term *module.* A module is composed of electrical and mechanical assemblies, circuit boards, interconnecting cables, and user-accessible controls.

Replaceable Parts

This manual refers to any field-replaceable assembly or mechanical part specifically by its name or generically as a replaceable part. In general, a replaceable part is any circuit board or assembly, such as the hard disk drive, or a mechanical part, such as the I/O port connectors, that is listed in the replaceable parts list.

Safety

Symbols and terms related to safety appear in the *General Safety Summary* found at the beginning of this manual.

Related Documentation

To read about	Use these documents
Installation and Operation	*Tektronix 4000 Series Digital Phosphor Oscilloscopes User Manual* (available in 11 languages)
Specifications and Performance	*Tektronix 4000 Series Technical Reference* (PDF only)
Programmer Commands	*Tektronix 4000 Series Programmer Manual* (PDF only)
Analysis and Connectivity Tools	*Getting Started with OpenChoice® Solutions Manual*

To read about	Use these documents
Installing and testing applications modules	*Tektronix 4000 Series Application Modules Installation Instructions Manual*
Oscilloscope calibrator	*Fluke Oscilloscope Calibrator Manual* at http://us.fluke.com

Operating Information

Operating Information

For information on installing and operating your DPO4000 or your MSO4000 Series Digital Phosphor Oscilloscope, refer to the *Tektronix 4000 Series Digital Phosphor Oscilloscopes User Manual*.

This manual is available, in 11 languages, on the Web at www.tektronix.com.

Theory of Operation

Theory of Operation

This chapter describes the electrical operation of the oscilloscope to the module level. Figure 2–1 shows the oscilloscope module interconnections.

Block Diagrams

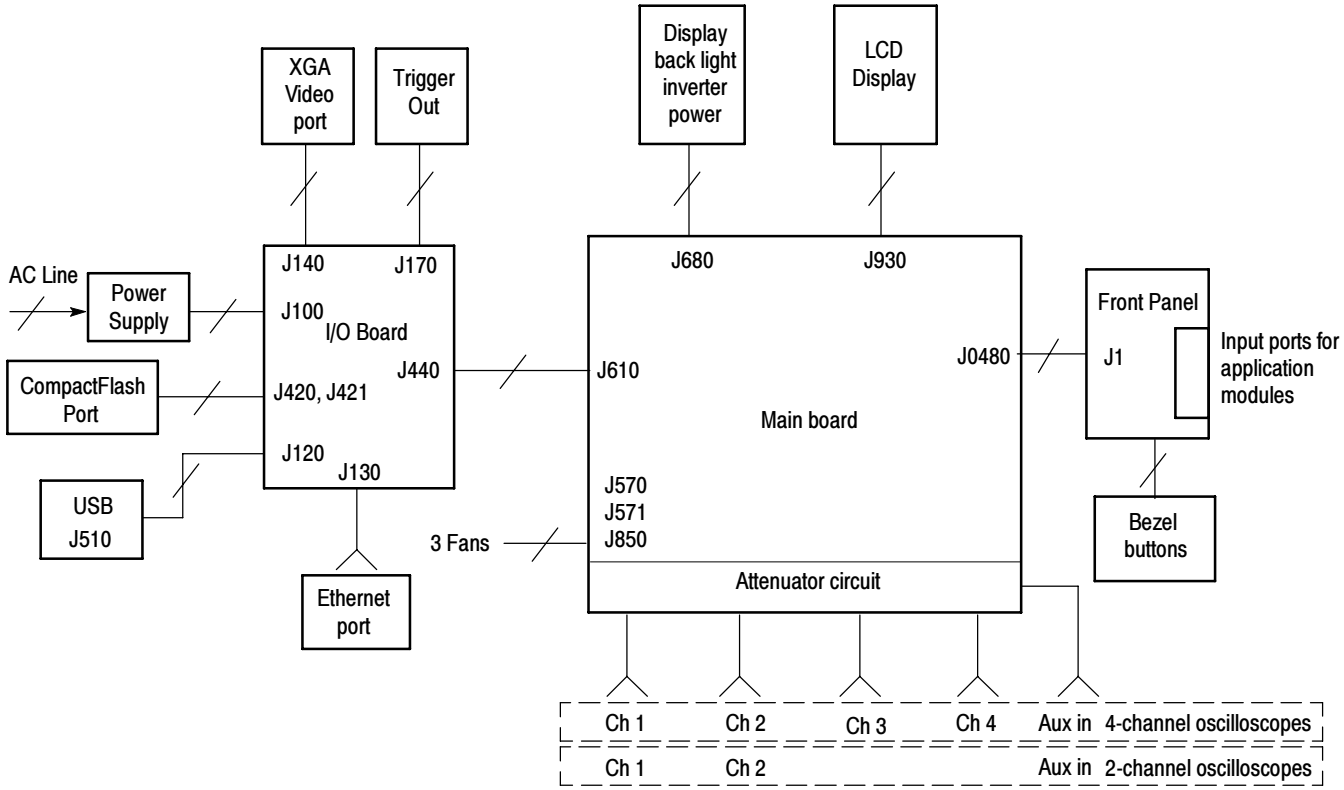

Figure 2-1: Oscilloscope module interconnections

Power Supply

The Power Supply board converts AC line voltage to +12 V to power for all internal circuits.

I/O Board

The I/O board contains USB ports, a CompactFlash port, an Ethernet port (LAN), an XGA Video port, and a Trigger Out BNC connector.

Main Board

The Main board module contains the following functions:

Acquisition System

The Acquisition system begins with the analog signal path and ends with a digitized signal in memory. The signal enters a channel input, and then passes through an attenuator and preamplifier. The analog signal from each preamplifier goes through a digitizer, a time base controller, and then into acquisition memory. The analog signal from each preamplifier is also distributed to a trigger circuit.

Trigger System

The Trigger system processes the analog signals from the preamplifiers and sends trigger information to the time-base controller. Advanced trigger functions are enabled only when the appropriate application modules and supporting software are installed.

Display System

The Display system combines live waveform data from acquisition memory with menus and text, and stores this information in display memory. It then uses this data to refresh the XGA display module (LCD).

Processor System

The Processor system contains a 440EP Power PC microprocessor that controls the entire instrument. The processor system also contains FLASH ROM, system RAM, and interfaces to USB ports and a CompactFlash port.

Power Converter

The Power Converter receives +12 V from the main power supply and generates voltages for the analog and digital circuitry on the Main board.

Front-Panel Board

The Front Panel board contains a microprocessor that reads the front-panel buttons and controls, and then sends this information to the processor system on the Main board. The Front Panel board also generates the probe compensation output signal and provides an interface to the application modules.

Adjustment Procedures

Adjustment Procedures

This chapter contains the factory adjustment procedure for the DPO4000 Series and the MSO4000 Series oscilloscopes. Only qualified personnel should perform adjustment procedures. Read the *Service Safety Summary* and the *General Safety Summary* before performing any service procedures.

***NOTE**. The voltage references inside the oscilloscope are very stable over time and should not require routine adjustment. Before performing any procedure in this chapter, do the Performance Verification procedures to check whether the oscilloscope meets specifications. See the Tektronix 4000 Series Technical Reference documentation.*

Successful completion of this adjustment procedure automatically updates the stored time and date of the latest successful adjustment. Completion of the Performance Verification procedure does not update this date and time. If no adjustment is needed, there is also no need to update the time and date of the adjustment.

Required Equipment

The following equipment, or a suitable equivalent, is required to complete these procedures.

The following table specifies required equipment for the MSO4000 Series oscilloscope.

Description	Minimum requirements	Example
DC voltage source	50 mV to 70 V, ±0.1% amplitude accuracy	Fluke or Wavetek 9500 Oscilloscope Calibrator with five 9530 active heads.
Digital calibrator probe		Tektronix part number: 174-4535-XX

The following table specifies required equipment for the DPO4000 Series oscilloscope.

Description	Minimum requirements	Example
DC voltage source	50 mV to 70 V, ±0.1% amplitude accuracy	Fluke or Wavetek 9500 Oscilloscope Calibrator with 9530 active heads
Sine Generator	1kHz1 GHz	Wavetek 9500 Oscilloscope Calibrator with one 9510 Output Module
Edge Generator	1 kHz with < 50 ps ch-ch skew	
50 Ω BNC cable	BNC male to BNC male, about 10 in (25 cm) long	Tektronix part number 012-0208-00
Adjustment tool	Non-conducting shaft with diameter = 0.1 in (= 2.5 mm)	Tektronix part number 003-1433-00

Overview of the Adjustment Process

Before performing adjustment procedures, you must warm up the oscilloscope for at least 30 minutes in an ambient temperature between 20 °C and 30 °C. Adjustments performed before warm-up or outside this temperature range may result in poor performance or calibration failure.

The factory adjustment procedure consists of a series of steps; as you move through these steps, the oscilloscope display provides instructions that describe the specific input signal requirements for each step. If the oscilloscope passes the step, it moves on to the next step. If the oscilloscope fails, you can repeat the step or choose to abort the procedure.

If you have difficulty completing the steps, refer to the *Completing the Procedure* section for specific instructions and troubleshooting information.

To complete the calibration procedure, you must know how to operate the oscilloscope calibrator. Please refer to the user manual, which can be found at http://us.fluke.com.

***NOTE**. Do not turn any knobs or push any front-panel buttons other than the Next Step or Previous Step buttons during the adjustment procedure. Doing so will cause the oscilloscope to abort the adjustment procedure. The oscilloscope uses the previous calibration constants if the adjustment procedure is aborted or fails.*

The screen does not display the actual oscilloscope settings (such as channel input impedance, or vertical and horizontal settings) during the adjustment procedure. The oscilloscope automatically sets the instrument settings, but these settings may not read out correctly on the display.

During some steps, the instrument may appear to be idle for several minutes while it is processing information internally.

If the oscilloscope completes all steps in the procedure successfully, a “Pass” message is displayed and the new calibration constants take effect. If the oscilloscope does not pass a step, you can repeat the step. To cancel the calibration procedure, press the **Menu Off** front panel button on the oscilloscope. This reverts the oscilloscope to the old calibration constants.

Factory Adjustment Procedure

To perform the factory adjustment procedure, complete these steps:

1. Connect the oscilloscope to an AC power source.

NOTE. *You must connect the oscilloscope and the test equipment to the same AC power circuit. Connect the oscilloscope and test instruments to a common power strip if you are unsure of the AC power circuit distribution. Connecting the oscilloscope and test instruments to separate AC power circuits can result in offset voltages between the equipment, which can invalidate the adjustment procedure.*

2. Power on the oscilloscope and warm it up for 30 minutes.
3. Power on the oscilloscope calibrator and warm it up for 30 minutes.
4. Connect the active heads from the calibrator to the oscilloscope, ensuring that Channel 1 on the calibrator connects to Channel 1 on the oscilloscope, and so on.

NOTE. *For the DPO4000, there will be either 2 or 4 channels to connect. For the MSO4000, there will be either 2 or 4 channels to connect, plus an additional channel connection for the digital probe. Plug the digital probe into the Channel 5 active head on the calibrator, but do not plug the probe into the oscilloscope until you begin a Deskew test.*

5. Power off the oscilloscope. Locate the hole in the rear panel that provides access to the CAL switch, as shown in Figure 3-1.

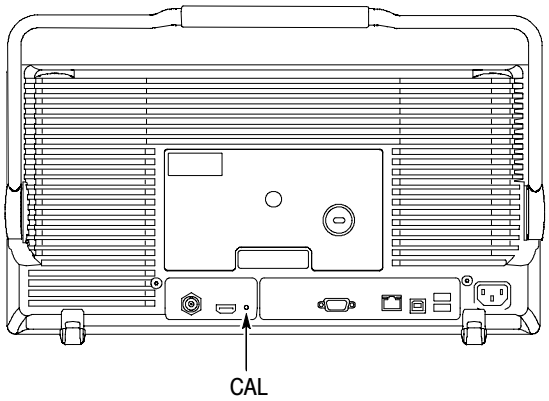

Figure 3-1: Rear panel

6. Insert the adjustment tool into the CAL switch hole. Use the tool to push and hold the CAL switch in while you power on the oscilloscope. Keep holding the switch until the oscilloscope shows the “Power-on self-test passed” message with the oscilloscope graticule in the background. This can take up to a minute.
7. Push the **Default Setup** button on the front panel of the oscilloscope.
8. Push the **Utility** button on the front panel of the oscilloscope.
9. Push the **Utility Page** lower-bezel button. The utility page menu appears, as shown in Figure 3-2.

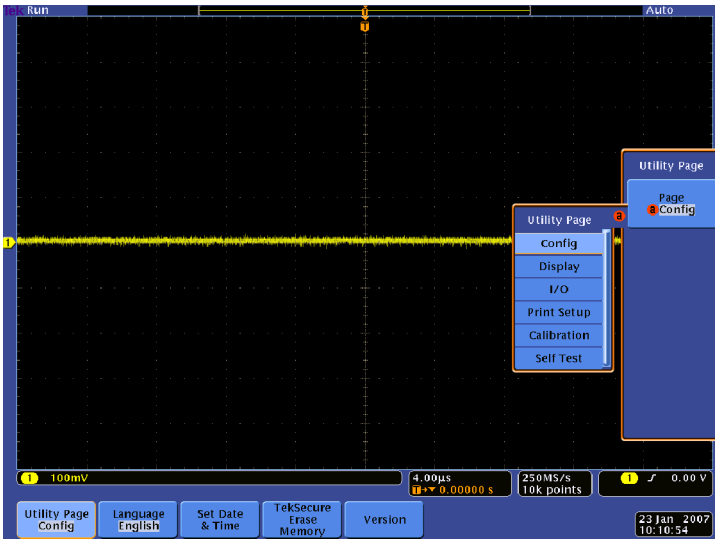

Figure 3-2: Utility page menu

10. Use the **Multipurpose a** knob to select **Calibration**, as shown in Figure 3-3.

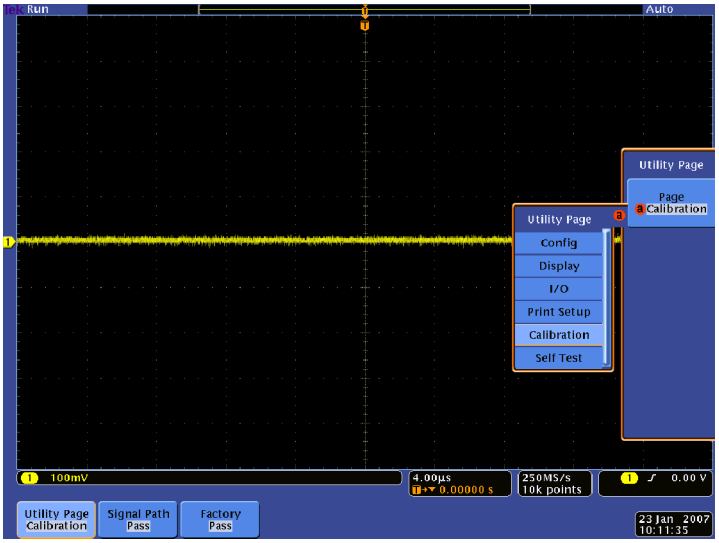

Figure 3-3: Calibration selection

11. Push the **Factory** lower-bezel button. The information dialog appears, as shown in Figure 3-4.

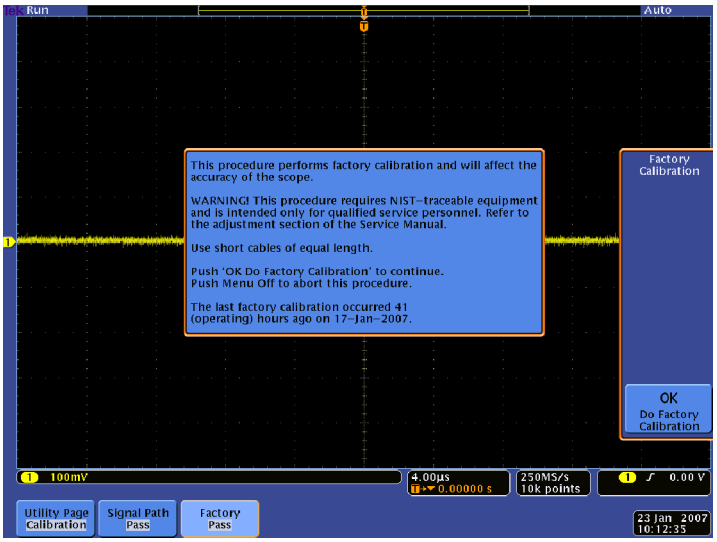

Figure 3-4: Factory information dialog

12. Push the **OK Do Factory Calibration** side-bezel button, as shown in Figure 3-4, to start the adjustment process. Prompts appear on the oscilloscope screen to indicate the signal type and the channels to which it should be connected.

NOTE. *The oscilloscope adjusts itself automatically using the calibrator signal as a reference. You do not need to make any adjustments.*

If you make an error, such as connecting the wrong input signal, you can repeat the last step by pushing the ***Return to Previous Screen*** *side bezel button.*

13. For each step, refer to the next table to identify the signal type, and then carefully follow the instructions for that signal type on the specified page.

Signal type	Example prompt	Refer to	Parameters to set
DC Voltage	Apply 0 V DC 50 Ω termination signal to 3.	Page 3-8	Waveform type, voltage, termination, channel
Time Mark	Apply 500 mV Pk-Pk 625 Hz 50 Ω termination time mark signal to 3.	Page 3-9	Waveform type, voltage, frequency, termination, channel
Deskew	Apply 1.0 V Pk-Pk 1 kHz 50 Ω termination deskew signal to 3.	Page 3-10	Waveform type, voltage, frequency, termination, channel
Sine Signal	Apply 2.0 V Pk-Pk 164M 50 Ω termination sine signal to 3.	Page 3-11	Waveform type, voltage, frequency, termination, channel

NOTE. *The oscilloscope screen will not provide you with all of the information that you need to complete the steps successfully, so it is critical that you follow the steps outlined in the Completing the Procedure section. Each time a new prompt appears, refer to the table above to identify the signal type, and then ensure that you are following every step that is outlined for that specific signal type.*

14. Continue with the adjustment process until it is complete and you receive the **Pass** notification. You can cancel the process at any time by pushing the **MENU OFF** button.

15. Complete the performance verification tests to verify that the adjustment procedure has correctly calibrated the oscilloscope. (See the *Tektronix 4000 Series Technical Reference*.) Incorrect use of calibration equipment can cause the oscilloscope to pass the Calibration Procedure but fail Performance Verification.

Completing the Procedure

Instructions for completing the DC Voltage, Time Mark, Deskew and Sine Signal tests are below. For each step in the calibration procedure, start at the beginning of the numbered instructions for the specific test type, and carefully complete each step.

If the oscilloscope fails a step, consult the *Troubleshooting* section at the end of this chapter, revert to the previous step and try again. If the step fails again, return to the first step in the calibration procedure and try the entire procedure again. If the procedure fails, there could be problem with the oscilloscope. Consider seeking customer support.

DC Voltage

The DC Voltage test is the first test to appear on the prompts, and it usually makes up the majority of the calibration procedure tests. For each DC Voltage test, complete all 8 steps listed below to best ensure that the test will pass.

1. Push the **DC/Square** button.
2. Push the **WAVEFORM** lower-bezel button, and then push the **DC Positive** right-bezel button.
3. Push the **CHANNEL SELECT** lower-bezel button.
4. Push the **LOAD** lower-bezel button to highlight either **1M Ω** or **50 M Ω**.
5. Select the specified channels, by using the side-bezel buttons, and then click the **EXIT lower**-bezel button.
6. If the amplitude field is not selected, use the front panel scroll buttons. Type the specified voltage, and then push the appropriate unit in the right-bezel menu.
   - **For 0 V**: ground the signal by pushing the grounding lower-bezel button. When this is active, you will not be able to make a channel selection, so in some cases you might need to temporarily deselect the grounding option while you make a channel selection. If the prompt requires all channels and the signal is grounded, The calibrator screen will default to Channel 1.
   - **For any non-zero voltage**: Before you select the voltage, you must first ensure that the calibrator is in direct mode. Push the lower-bezel button until 1.0 is selected.
   - **For 6 V or -6 V**:
     a. Push the AUX front panel button.

b. Push the side-bezel button for a 6 V signal or push the side-bezel button for a -6 V signal. The polarity will be indicated only by the icon that appears in the upper-left corner of the calibrator screen.

c. Set the amplitude to either 6 V or -6 V.

d. Set the Pulse/Energy setting to 7.2 Joules (the time should show 10s).

e. When all of the parameters are set and you ensure that the output is ON, push the **Trig Pulse** side-bezel and IMMEDIATELY push the **OK Do Next Step** side-bezel button on the oscilloscope. WARNING Once you push the **Trig Pulse** button on the calibrator, you have only 9 seconds to push the **OK Do Next Step** button on the oscilloscope. If the instrument fails one of these tests, go all the way back to the first 6 V test (6 V on channel 1) and start that sequence over again.

7. Ensure that the red light is illuminated to indicate that the output is on. If not, push the **ON** button, as shown below:

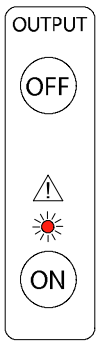

8. On the oscilloscope, push the **OK Do Next Step** side-bezel button.

Time Mark

The Time Mark test is often the second test type to appear in the prompts. When you receive a time mark prompt, complete the following steps:

1. Push the **Markers** front-panel button.

2. Push the **WAVEFORM** lower-bezel button, and then push the side-bezel button.

NOTE. If a 625 Hz signal is required, set the time marker to 1.6 ms.

3. Select the **Amplitude** field using the front panel scroll buttons, and then change the voltage by using the large front panel knob on the calibrator.
4. Ensure that the red light is illuminated to indicate that the output is on. If not, push the **ON** button.
5. On the oscilloscope, push the **OK Do Next Step** right-bezel button.

Deskew (MSO Only)

If you are using the MSO4000 Series oscilloscope, and you recieve a prompt for a deskew test, complete the following steps:

1. Plug the probe, notch down, into the digital channel input, as shown in Figure 3-5. Ensure that is snaps into place. Keep the probe plugged in for the remainder of the calibration procedure.

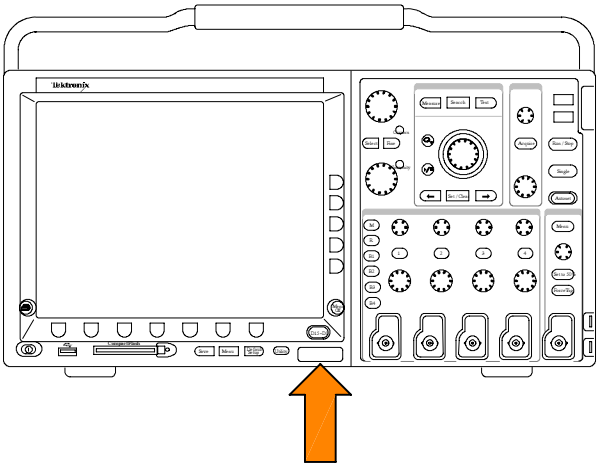

Figure 3-5: Digital channel input

2. Push the **Aux** front-panel button, and then push the **Zero skew** side-bezel button.
3. Set the specified voltage, frequency, and termination.
4. Push the **CHANNEL SELECT** button and ensure that all channels are selected, including Channel 5.
5. Ensure that the red light is illuminated to indicate that the output is on. If not, push the **ON** button.
6. On the oscilloscope, push the **OK Do Next Step** right-bezel button. In some cases, this can take several minutes.

CAUTION. *Keep the digital probe plugged in to the oscilloscope. Unplugging the probe may result in aborting the test.*

Sine Signal

When a Sine Signal prompt appears, complete the following steps:

1. Push the **Sine** front panel button.
2. To ensure that the voltage is in direct mode, push the lower-bezel button and select **1.0**.
3. Push the **CHANNEL SELECT** lower-bezel button, and then ensure that Channel 5 is selected.
4. Ensure that the red light is illuminated to indicate that the output is on. If not, push the **ON** button.
5. On the oscilloscope, push the **OK Do Next Step** right-bezel button.

Troubleshooting

Refer to the next table for common issues encountered during the calibration procedure.

Problem	Things to try
The instrument fails a test	Are the channels hooked up properly, routed to the right channels, and turned on? Is the signal set to the correct waveform, frequency, and termination (if applicable to the test)? Is the output set to **ON** (the red light will be illuminated)? If you make a correction or find that everything appears to be correct, click the **Go back a step** button to try the test again.
I can't set the amplitude to 0 V, as specified in the prompt	Ground the signal by pushing the lower-bezel button.
I can't find the parameters that I need to set	Is the waveform set correctly? Is the grounding button on? When this is active, you will not be able to make a channel selection, so in some cases you might need to temporarily deselect the grounding option while you make a channel selection. If you can find the termination settings, click the **CHANNEL SELECT** lower-bezel button.
I can't set the voltage to 625 Hz	Set the time marker to 1.6 Ms. This will automatically set the voltage to 625 Hz.
I can't set the signal to all channels	If you are unable to set the signal to all channels, try setting the signal to Channel 1.

Problem	Things to try
I'm having trouble with tests that require 6 V or -6 V	Follow the steps for 6 V and -6 V that appear in Step 6 of the DC Voltage test. Ensure that the polarity is correct, by referring to the icon that appears in the upper-left corner of the calibrator screen. If the instrument fails a test, go all the way back to the first 6 V test (6 V on Channel 1) and start the sequence over again.
The Sine Signal test failed	If the prompt specified Channel 4, try setting the signal to Channel 5, instead.

Maintenance

Maintenance

This section contains the information needed to do periodic and corrective maintenance on the oscilloscrope, as well as repackaging instructions if you need to return the oscilloscope to Tektronix for service.

Preventing ESD

Before servicing this product, read the *Safety Summary* and *Introduction* at the front of the manual and the electrostatic discharge (ESD) information below.

CAUTION. *Static discharge can damage any semiconductor component in this oscilloscope*

When performing any service that requires internal access to the oscilloscope, adhere to the following precautions to avoid damaging internal modules and their components due to electrostatic discharge.

1. Minimize handling of static-sensitive circuit boards and components.
2. Transport and store static-sensitive modules in their static protected containers or on a metal rail. Label any package that contains static-sensitive boards.
3. Discharge the static voltage from your body by wearing a grounded antistatic wrist strap while handling these modules. Service static-sensitive modules only at a static-free work station.
4. Do not place anything capable of generating or holding a static charge on the work station surface.
5. Handle circuit boards by the edges when possible.
6. Do not slide the circuit boards over any surface.
7. Avoid handling circuit boards in areas that have a floor or work-surface covering capable of generating a static charge.

Inspection and Cleaning

Inspection and cleaning are done as preventive maintenance. Preventive maintenance, when done regularly, may prevent oscilloscope malfunction and enhance its reliability.

Preventive maintenance consists of visually inspecting and cleaning the oscilloscope and using general care when operating it.

How often you do maintenance depends on the severity of the environment in which the oscilloscope is used. A proper time to perform preventive maintenance is just before oscilloscope adjustment.

General Care

The cabinet helps keep dust out of the oscilloscope and should normally be in place when operating the oscilloscope.

Flat Panel Display Cleaning

The display is a soft plastic display and must be treated with care during cleaning.

CAUTION. *Improper cleaning agents or methods can damage the flat panel display.*

Avoid using abrasive cleaners or commercial glass cleaners to clean the display surface.

Avoid spraying liquids directly on the display surface.

Avoid scrubbing the display with excessive force.

Clean the flat panel display surface by gently rubbing the display with a clean-room wipe (such as Wypall Medium Duty Wipes, #05701, available from Kimberly-Clark Corporation).

Interior Cleaning

Use a dry, low-velocity stream of air to clean the interior of the chassis. Use a soft-bristle, non-static-producing brush for cleaning around components. If you must use a liquid for minor interior cleaning, use a 75% isopropyl alcohol solution and rinse with deionized water.

WARNING. *To avoid injury, power down the instrument and disconnect it from line voltage before performing any procedure that follows.*

Exterior Cleaning

Clean the exterior surfaces of the chassis with a dry lint-free cloth or a soft-bristle brush. If any dirt remains, use a cloth or swab dipped in a 75% isopropyl alcohol solution. Use a swab to clean narrow spaces around controls and connectors. Do not use abrasive compounds on any part of the chassis that may damage the chassis.

Clean the On/Standby switch using a dampened cleaning towel. Do not spray or wet the switch directly.

CAUTION. *Avoid the use of chemical cleaning agents, which might damage the plastics used in this oscilloscope. Use only deionized water when cleaning the menu buttons or front-panel buttons. Use a 75% isopropyl alcohol solution as a cleaner and rinse with deionized water. Before using any other type of cleaner, consult your Tektronix Service Center or representative.*

Lubrication. There is no periodic lubrication required for this oscilloscope.

Exterior Inspection

Inspect the outside of the oscilloscope for damage, wear, and missing parts, using Table 4–1 as a guide. Immediately repair defects that could cause personal injury or lead to further damage to the oscilloscope.

Table 4-1: External inspection check list

Item	Inspect for	Repair action
Cabinet, front panel, and cover	Cracks, scratches, deformations, damaged hardware.	Repair or replace defective module.
Front-panel knobs	Missing, damaged, or loose knobs.	Repair or replace missing or defective knobs.
Connectors	Broken shells, cracked insulation, and deformed contacts. Dirt in connectors.	Repair or replace defective modules. Clear or wash out dirt.
Carrying handle, and cabinet feet	Correct operation.	Repair or replace defective module.
Accessories	Missing items or parts of items, bent pins, broken or frayed cables, and damaged connectors.	Repair or replace damaged or missing items, frayed cables, and defective modules.

If the display is very dirty, moisten the wipe with distilled water or a 75% isopropyl alcohol solution and gently rub the display surface. Avoid using excess force or you may damage the plastic display surface.

CAUTION. *To prevent getting moisture inside the oscilloscope during external cleaning, use only enough liquid to dampen the cloth or applicator.*

Interior Inspection

To access the inside of the oscilloscope for inspection and cleaning, refer to the *Removal Procedures* in this section.

Inspect the internal portions of theoscilloscope for damage and wear, using Table 4–2 as a guide. Repair any defects immediately.

If any circuit board is repaired or replaced, check Table 4–2 to see if it is necessary to adjust the oscilloscope.

CAUTION. *To prevent damage from electrical arcing, ensure that circuit boards and components are dry before applying power to the oscilloscope.*

Table 4-2: Internal inspection check list

Item	Inspect for	Repair action
Circuit boards	Loose, broken, or corroded solder connections. Burned circuit boards. Burned, broken, or cracked circuit-run plating.	Remove and replace damaged circuit board.
Resistors	Burned, cracked, broken, blistered condition.	Remove and replace damaged circuit board.
Solder connections	Cold solder or rosin joints.	Resolder joint and clean with isopropyl alcohol.
Capacitors	Damaged or leaking cases. Corroded solder on leads or terminals.	Remove and replace damaged circuit board.
Wiring and cables	Loose plugs or connectors. Burned, broken, or frayed wiring.	Firmly seat connectors. Repair or replace modules with defective wires or cables.
Chassis	Dents, deformations, and damaged hardware.	Straighten, repair, or replace defective hardware.

Cleaning Procedure — Interior. To clean the oscilloscope interior, do the following steps:

1. Blow off dust with dry, low-pressure, deionized air (approximately 9 psi).
2. Remove any remaining dust with a lint-free cloth dampened in isopropyl alcohol (75% solution) and rinsed with warm deionized water. (A cotton-tipped applicator is useful for cleaning in narrow spaces and on circuit boards.)

***STOP**. If, after doing steps 1 and 2, a module is clean upon inspection, skip the following steps.*

If there is still dust or dirt on the module, the oscilloscope may be spray washed using a solution of 75% isopropyl alcohol by doing the following steps:

1. Gain access to the parts to be cleaned by removing easily accessible shields and panels (see *Removal Procedures*).
2. Spray wash dirty parts with the isopropyl alcohol and wait 60 seconds for the majority of the alcohol to evaporate.
3. Use hot (120 °F to 140 °F) deionized water to thoroughly rinse them.
4. Dry all parts with low-pressure, deionized air.
5. Dry all components and assemblies in an oven or drying compartment using low-temperature (125 °F to 150 °F) circulating air.

Overview of Removal Procedures

Refer to Figures 4-1 and 4-2 for the location of modules that you are removing or installing. If you are disassembling the instrument for cleaning, refer to the *Inspection and Cleaning* procedure on page 4-1 for instructions.

List of Modules

The *Mechanical Parts List* chapter provides a list of all replaceable modules. Any replaceable component, assembly, or part is referred to as a module.

WARNING. *Only qualified personnel should perform service procedures. Before doing this or any other procedure in this manual, read the* General Safety Summary *and* Service Safety Summary *located at the beginning of this manual. Also, to prevent possible injury to service personnel or damage to electrical components, read* Preventing ESD *on page 4-1.*

Tools Required

You will need the following tools to remove and replace all the modules in the instrument.

- Torque-limiting screwdriver, 12 in-lb (1.3 N-m) range with Torx® T-15 tips. If you are using a magnetic screwdriver with interchangeable bits, the T-15 bit must be a long bit, at least 5 cm (2 in) overall length.
- Screwdriver with 1/8 inch flat blade
- 3/16 inch nut driver
- Needle-nose pliers

Trim, Cabinet, and Module Removal

Use the following tables to remove the trim, cabinet, and internal modules.

WARNING. *Before doing any procedure in this subsection, disconnect the power cord from the line voltage source. Failure to do so could cause serious injury or death.*

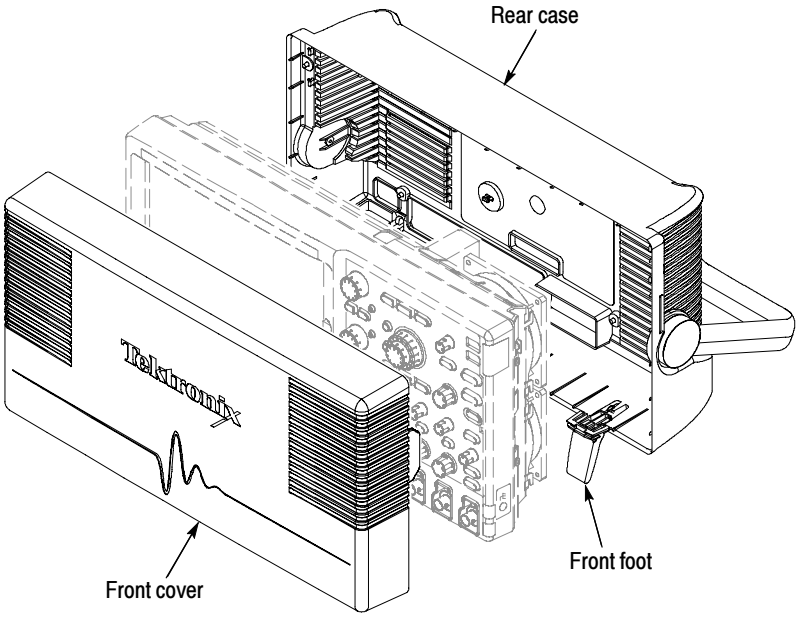

Figure 4-1: Locator for trim and cabinet removal

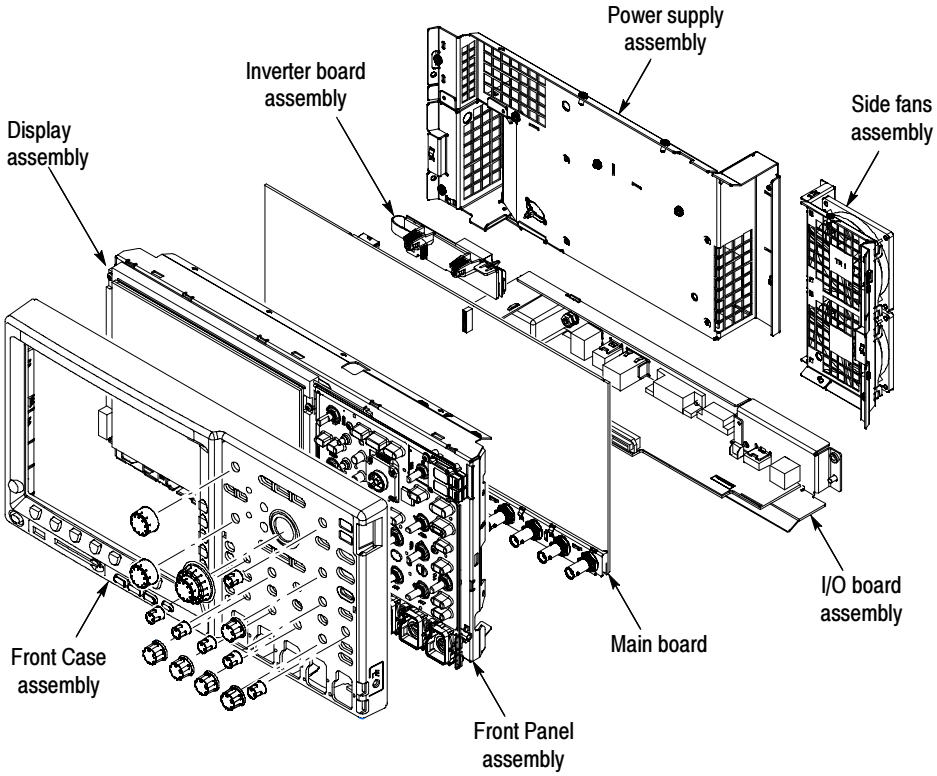

Figure 4-2: Locator for internal modules

Removal Procedures

These procedures require that you have access to the module that you are removing. Refer to the exploded drawings, Figures 5-1 through 5-9 on pages 5-5 through 5-21, and to Figures 4-1 and 4-2 on pages 4-7 and 4-8 to determine which trim and/or modules to remove.

CAUTION. *When removing or installing the keypad, do not touch the switch contacts with your fingers. The oils on your fingers will degrade or damage the switch contacts. To help prevent damage to the keypad, use cotton gloves when removing or installing the keyboard pad.*

CAUTION. *To avoid damage to the Front Panel Standby/On switch assembly, do not set the Display module assembly on a work surface. Sliding the oscilloscope over the edge of the work surface could break off the On/Standby switch assembly.*

Rear Case

Follow these steps to remove the Rear Case assembly. Use a Torx T-15 screwdriver tip. See Figure 5-1 on page 5-5.

1. Remove the screw from the back and sides of the Rear Case assembly.
2. Grasp the case and pull outwards to remove it.

Power Supply Module

Follow these steps to remove the Power Supply module. You need to have previously removed the Rear Case assembly. Use a Torx T-15 screwdriver tip. See Figure 5-6 on page 5-15.

1. Remove the 3 screws that secure the Power Supply module to the chassis.
2. Disconnect the power supply fan and connectors from the I/O board and the Main board.
3. Lift the Power Supply module off the chassis.

Power Supply Fan. Follow these steps to remove the Power Supply fan assembly. You need to have previously removed the Rear Case assembly and Power Supply assembly. Use a Torx T-15 and a P2 screwdriver tip. See Figure 5-6 on page 5-15.

1. Remove the 3 screws that attach the power supply cover.
2. Lift the Power Supply cover off.
3. Use the P2 screwdriver tip and remove the 2 screws that attach the fan to the cover.

Power Supply Board. Follow these steps to remove the Power Supply board. You need to have previously removed the Rear Case assembly and Power Supply assembly. Use a Torx T-15 screwdriver tip. See Figure 5-6 on page 5-15.

1. Remove the 3 screws that attach the Power Supply cover.
2. Lift off the Power Supply cover.
3. Remove the 4 screws that attach the Power Supply board to the Power Supply bracket.

I/O Board

Follow these steps to remove the I/O board. You need to have previously removed the Rear Case assembly and Power Supply module. Use a Torx T-15 screwdriver tip. See Figure 5-6 on page 5-15.

1. Remove the 5 screws that hold the I/O board to the chassis.
2. Lift straight up to remove.

Main Fans

Follow these steps to remove the side fan assembly. You need to have previously removed the Rear Case assembly, Power Supply assembly, and I/O board. Use a Torx T-15 screwdriver tip. See Figure 5-8 on page 5-19.

1. Remove the 6 screws that hold the side fans to the chassis.
2. Disconnect the two fan connectors from the Main board.
3. Slide the fan assembly out and away from the chassis.

Main Board

Follow these steps to remove the Main board. You need to have previously removed the Rear Case assembly, power supply, I/O board, and side fans. Use a Torx T-15 screwdriver tip. See Figure 5-8 on page 5-19.

1. Disconnect the display cable from the Main board.
2. Disconnect the backlight cable from the Inverter board.
3. Remove 13 screws from the Main board that connect it to the chassis.
4. Lift the Main board up to remove.

Inverter board. Follow these steps to remove the Inverter board from the Main board. You must have previously removed the Main board. Use a Torx T-15 screwdriver tip. See Figure 5-8 on page 5-19.

1. Disconnect the Inverter board cable from the Main board.
2. Remove the Inverter board from the plastic bracket.
3. Remove the 2 screws that hold the Inverter board bracket to the Main board.
4. Remove the Inverter board bracket from the Main board.

Front Case Assembly

Follow these steps to remove the Front Case assembly. You must have previously removed the Rear Case assembly. See Figure 5–2 on page 5–7.

1. Unattach 8 snaps (3 top, 3 bottom, 1 left and 1 right). Work from a corner, and keep tension on the case while moving to the next set of snaps
2. Remove the Front Case by pulling back the board snaps and lifting the lower right corner of the Front Case.
3. Place the oscilloscope face up on a soft surface (such as an anti-static mat), with the bottom facing you.
4. Disconnect the bezel button flex circuit by gently pulling the flex circuit out of the connector on the Front Panel board.

Display Module

Follow these steps to remove the display module. You need to have previously removed the power supply assembly, I/O board, and Front Case assembly. Use a Torx T-15 screwdriver tip. See Figure 5–2 on page 5–7.

1. Disconnect the display power cable from the Main board and the backlight cable from the Inverter board.
2. Remove the 4 screws that hold the display to the front chassis.
3. Gently lift the display up and off of the chassis.

CAUTION. *Be careful when removing and reinstalling the Display module cables. If the connectors have bent pins or are installed incorrectly, the Display may be destroyed.*

Front Panel Module

Follow these steps to remove the Front Panel module. You need to have previously removed the Front Case assembly. Use a Torx T-15 screwdriver tip. See Figure 5–2 on page 5–7.

1. Remove the 9 screws holding the Front Panel board to the chassis.
2. Lift the Front Panel board off of the chassis.

Troubleshooting

This section contains information and procedures to help you isolate a defective module in the DPO4000 series or the MSO4000 series oscilloscopes.

WARNING. *Before doing this or any other procedure in this manual, read the* General Safety Summary *and* Service Safety Summary *found at the beginning of this manual. Also, to prevent possible injury to service personnel or damage to electrical components, read* Preventing ESD *on page 4-1.*

Adjustment After Repair

If you replace the Main board, you must adjust the instrument after repair. Refer to the *Adjustment Procedures* section, beginning on page 3-1, for information about the adjustment.

Required Tools and Equipment

You need the following equipment to troubleshoot the instrument.

Tools and Equipment	Example
DMM	3.5 or above

Troubleshooting Procedure

Figures 4–3 through 4–5 are troubleshooting procedure flowcharts. Use them to troubleshoot an instrument failure. Begin with Figure 4–3.

WARNING. *Before removing the cabinet, disconnect the power cord from the line voltage source. Failure to do so could cause serious injury or death.*

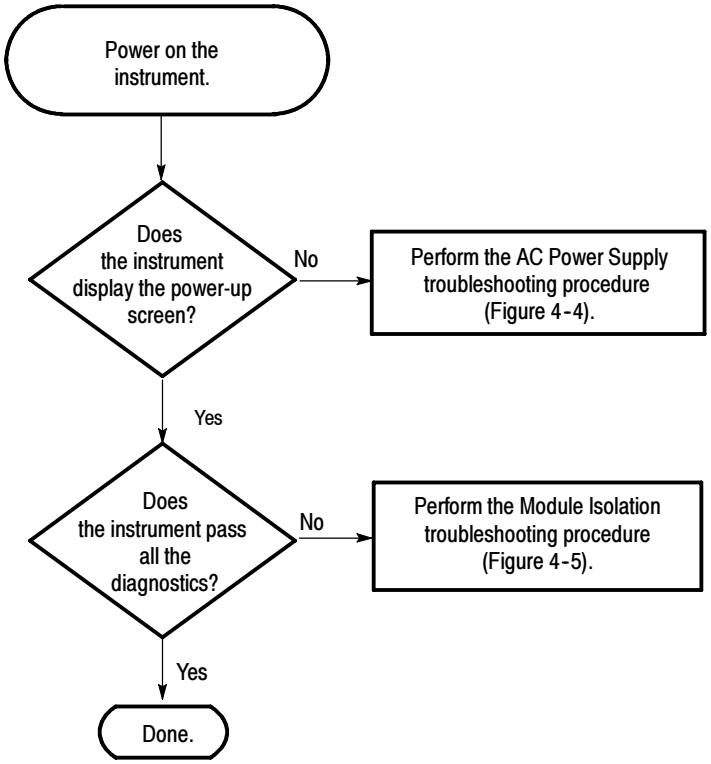

Figure 4-3: Primary troubleshooting procedure

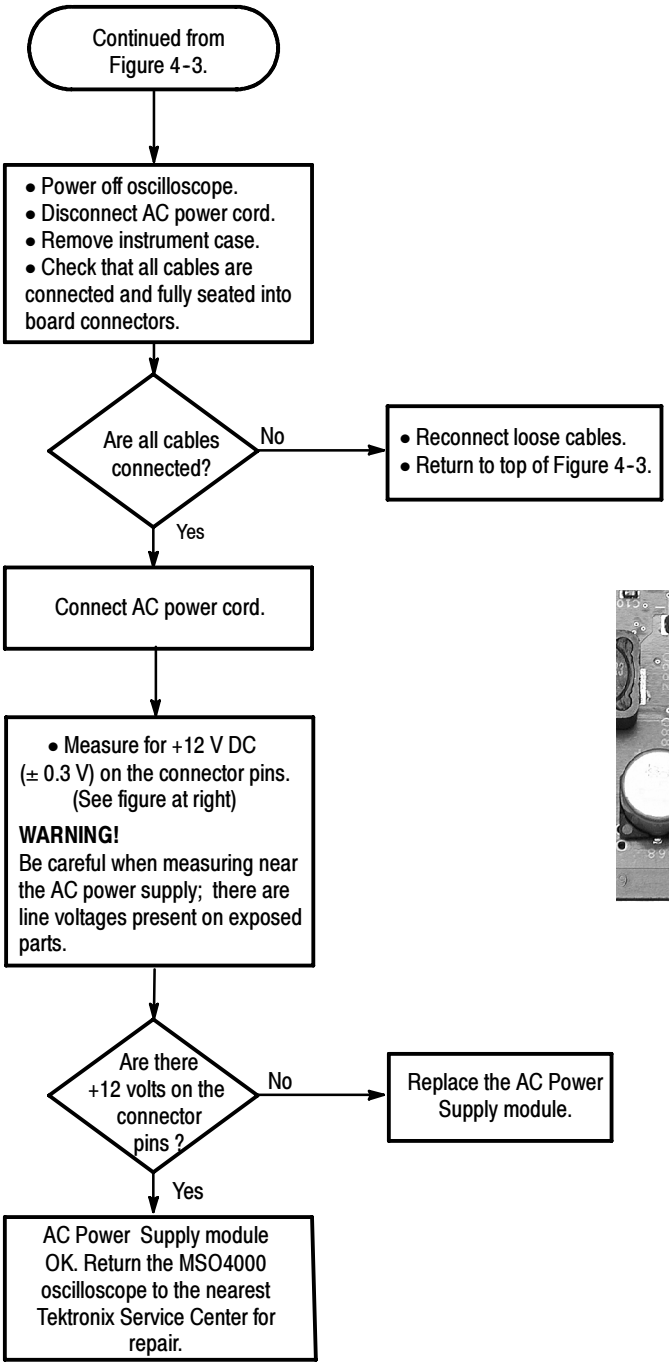

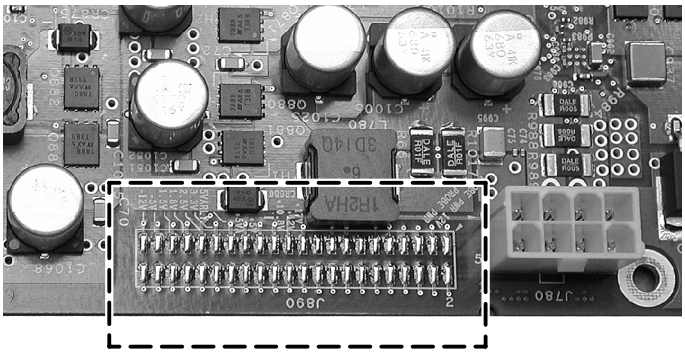

Figure 4-4: AC power supply troubleshooting procedure

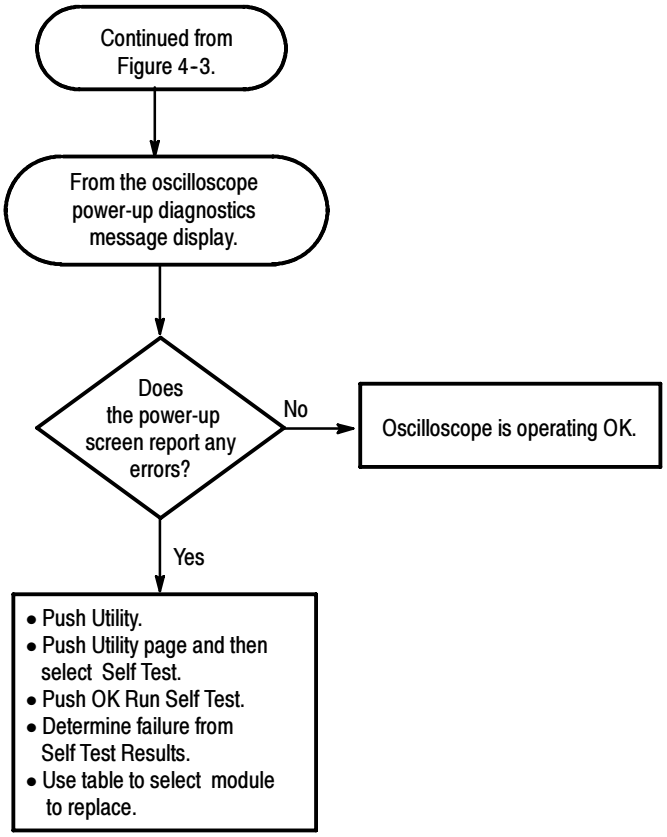

Failed Test	Most Likely Cause
Acquisition	Main board
CPU	Main board
Display	Main board
Front Panel	Front Panel (or Main board)
I/O	Comm module (or Main board)
ROM	Main board
App Modules	Front Panel (or App Keys)

Figure 4-5: Module isolation troubleshooting procedure

Unpacking and Repacking Instructions

This section contains the information needed to unpack the oscilloscope and repack it for shipment or storage.

Unpacking

The oscilloscope and its standard accessories are carefully packed at the factory in a shipping carton. If, upon receipt, damage to the shipping carton is evident, notify the shipper. Tektronix, Inc. is not responsible for damage caused during shipping.

If you have not already done so, carefully remove the oscilloscope and its accessories from the shipping carton and inspect them for damage. Save the shipping carton for repacking or storage.

Repacking

Use a corrugated cardboard shipping carton having a test strength of at least 275 pounds (125 kg) and with an inside dimension at least six inches (15.25 cm) greater than the instrument dimensions.

If the instrument is being shipped to a Tektronix Service Center, enclose the following information:

- The owner's address
- Name and phone number of a contact person
- Type and serial number of the instrument
- Reason for returning
- A complete description of the service required

Seal the shipping carton with an industrial stapler or strapping tape.

Mark the address of the Tektronix Service Center and also your own return address on the shipping carton in two prominent locations.
See www.tektronix.com/service to find a service center near you.

Storage

The oscilloscope should be stored in a clean, dry environment. The following environmental characteristics apply for both shipping and storage:

- Temperature range: –20 °C to +60 °C
- Altitude: To 15,000 m

See the *Tektronix 4000 Series Technical Reference* for a complete listing of the environmental characteristics.

Mechanical Parts List

Mechanical Parts List

This chapter contains a list of the replaceable modules for the DPO4000 and MSO4000 Series Oscilloscopes. Use this list to identify and order replacement parts.

Parts Ordering Information

Replacement parts are available through your local Tektronix field office or representative.

Changes to Tektronix products are sometimes made to accommodate improved components as they become available and to give you the benefit of the latest improvements. Therefore, when ordering parts, it is important to include the following information in your order.

- Part number (see *Part Number Revision Level* below)
- Instrument type or model number
- Instrument serial number
- Instrument modification number, if applicable

If you order a part that has been replaced with a different or improved part, your local Tektronix field office or representative will contact you concerning any change in part number.

Change information, if any, is located at the rear of this manual.

Part Number Revision Level

Tektronix part numbers contain two digits that show the revision level of the part. For some parts in this manual, you will find the letters XX in place of the revision level number.

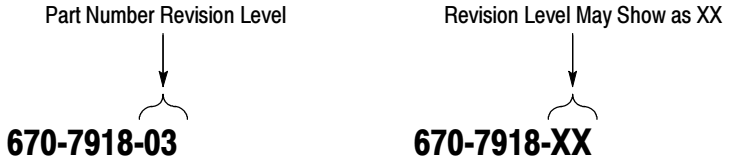

When you order parts, Tektronix will provide you with the most current part for your product type, serial number, and modification (if applicable). At the time of your order, Tektronix will determine the part number revision level needed for your product, based on the information you provide.

Module Servicing

Modules can be serviced by selecting one of the next three options. Contact your local Tektronix service center or representative for repair assistance.

Module Exchange. In some cases you may exchange your module for a remanufactured module. These modules cost significantly less than new modules and meet the same factory specifications. For more information about the module exchange program, call 1-800-833-9200, extension 2.

Module Repair and Return. You may ship your module to us for repair, after which we will return it to you.

New Modules. You may purchase replacement modules in the same way as other replacement parts.

Using the Replaceable Parts List

This section contains a list of the mechanical and/or electrical components that are replaceable for the instrument. Use this list to identify and order replacement parts. The following table describes each column in the parts list.

Parts List Column Descriptions

Column	Column Name	Description
1	Figure & Index Number	Items in this section are referenced by figure and index numbers to the exploded view illustrations that precede the list.
2	Tektronix Part Number	Use this part number when ordering replacement parts from Tektronix.
3 and 4	Serial Number	Column three indicates the serial number at which the part was first effective. Column four indicates the serial number at which the part was discontinued. No entries indicates the part is good for all serial numbers.
5	Qty	This indicates the quantity of parts used.
6	Name & Description	An item name is separated from the description by a colon (:). Because of space limitations, an item name may sometimes appear as incomplete. Use the U.S. Federal Catalog handbook H6-1 for further item name identification.

Abbreviations

Abbreviations conform to American National Standard ANSI Y1.1-1972.

Exploded Views

Figures 5-1 through 5-8 on the following pages show the module-level exploded views of the DPO4000 Series and the MSO4000 Series oscilloscopes. Each exploded view is indexed by the numbers in the figure.

Replaceable Parts List: DPO4000 and MSO4000 case

Fig. & index number	Tektronix part number	Serial no. effective	Serial no. discont'd	Qty	Name & description
5-1					Exploded View, Case
-1	200-4908-00			1	COVER, FRONT, PROTECTIVE
-2	202-0441-00			1	CASE, REAR ASSEMBLY
-3	211-1174-00			4	SCREW,MACHINE; W/HEAVY PATCH THREADLOCKING MATERIAL; 6-32 X 0.312 L,PNH,STL CAD PLT,T15
-4	335-1186-00			1	MARKER,IDENT;LABEL,REAR PANEL
-5	348-1798-00			2	FOOT, FRONT ASSEMBLY

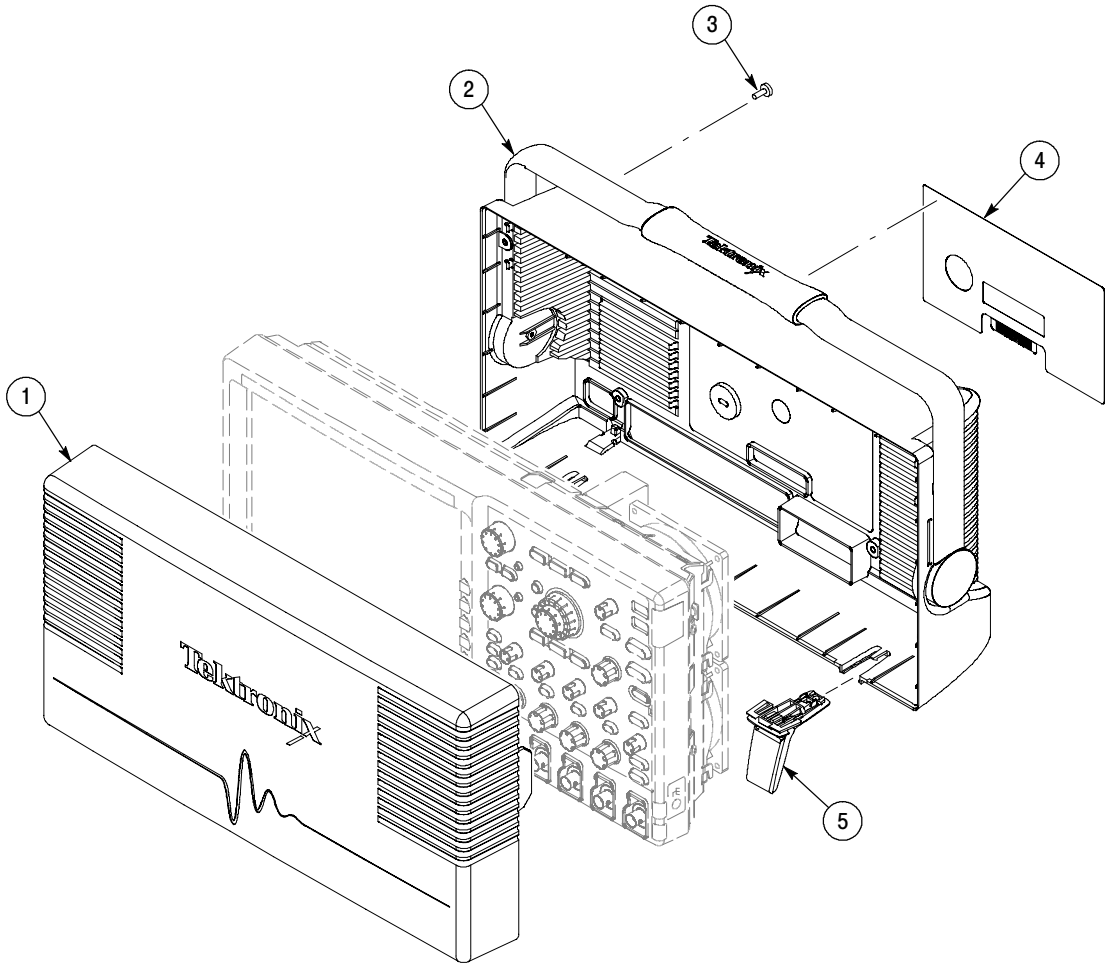

Figure 5-1: Exploded view, case

Replaceable Parts List: DPO4000 front panel and display, 4 channel

Fig. & index number	Tektronix part number	Serial no. effective	Serial no. discont'd	Qty	Name & description
5-2					DPO4000 Front Panel and Display, 4 Channel
-1	202-0432-00			1	FRONT CASE ASSEMBLY
-2	335-1187-00			1	LABEL. FRONT PANEL, MODEL DPO4054
	335-1191-00			1	LABEL. FRONT PANEL, MODEL DPO4104
	335-1193-00			1	LABEL. FRONT PANEL, MODEL DPO4034
-3	366-0860-01			5	KNOB, .685 DIA, SOFT TOUCH
-4	366-0859-01			6	KNOB, .470 DIA, SOFT TOUCH
-5	366-0861-01			2	KNOB, .925 DIA, SOFT TOUCH
-6	366-0865-00			1	KNOB, JOG
-7	358-0883-00			1	BUSHING (JOG SHUTTLE KNOB)
-8	366-0867-01			1	KNOB, SHUTTLE
-9	335-1467-00			1	LABEL. FRONT PANEL, OVERLAY, RUSSIAN
	335-1466-00			1	LABEL. FRONT PANEL, OVERLAY, KOREAN
	335-1465-00			1	LABEL. FRONT PANEL, OVERLAY, STD CHINESE
	335-1464-00			1	LABEL. FRONT PANEL, OVERLAY, SIM CHINESE
	335-1463-00			1	LABEL. FRONT PANEL, OVERLAY, PORTUGUESE
	335-1462-00			1	LABEL. FRONT PANEL, OVERLAY, JAPANESE
	335-1461-00			1	LABEL. FRONT PANEL, OVERLAY, SPANISH
	335-1460-00			1	LABEL. FRONT PANEL, OVERLAY, GERMAN
	335-1459-00			1	LABEL. FRONT PANEL, OVERLAY, ITALIAN
	335-1458-00			1	LABEL. FRONT PANEL, OVERLAY, FRENCH
10	335-1183-00			1	LABEL. FRONT PANEL, 4CH
11	200-4418-00			1	COVER; OPTION KEY DOOR,0.7270 X 1.2250 X 0.310,PC/ ABS,FR110,SILVER GRAY
12	260-2813-01			1	SWITCH,KEYPAD;ELASTOMERIC FRONT PANEL
13	211-1174-00			9	SCREW,MACHINE; W/HEAVY PATCH THREADLOCKING MATERIAL; 6-32 X 0.312 L,PNH,STL CAD PLT,T15
14	872-0005-00			1	FRONT PANEL BOARD, 4 CH
15	335-1194-00			1	MARKER, FRONT PANEL, I/O
16	348-1860-00			2	GASKET, ELEC; CONDUCTIVE URETHANE FOAM
17	441-2378-00			1	CHASSIS;FRONT; SAFETY CONTROLLED
18	650-4715-01			1	ASSEMBLY, LCD DISPLAY
19	174-5014-00			1	CABLE ASSY,SP;DISPLAY DATA,FLAT FLEX
20	211-1174-00			4	SCREW,MACHINE; W/HEAVY PATCH THREADLOCKING MATERIAL; 6-32 X 0.312 L,PNH,STL CAD PLT,T15

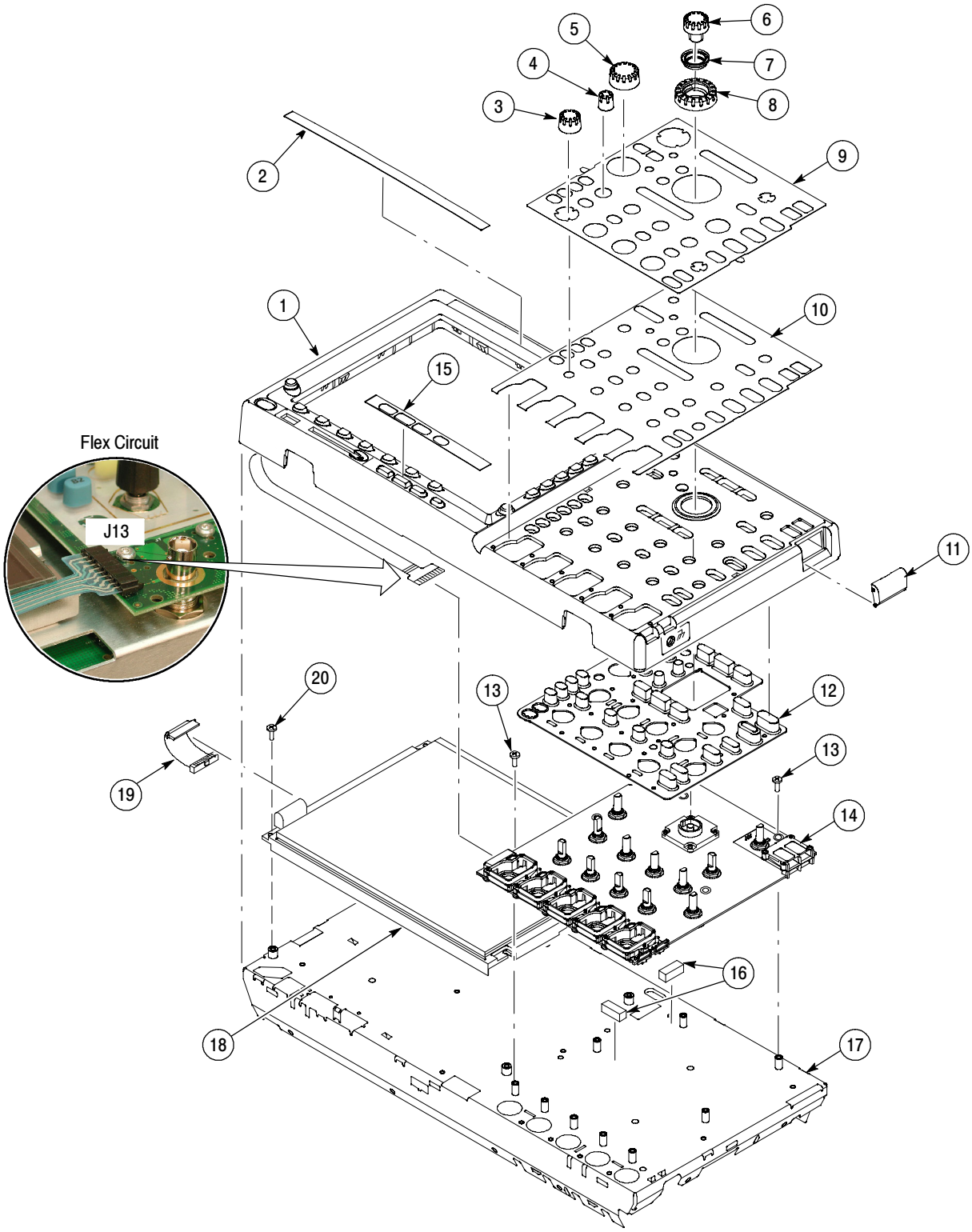

Figure 5-2: Exploded view: DPO4000 front panel and display, 4-channel instruments

Replaceable Parts List: MSO4000 front panel and display, 4 channel

Fig. & index number	Tektronix part number	Serial no. effective	Serial no. discont'd	Qty	Name & description
5-3					MSO 4000 Front Panel and Display, 4 Channel
-1	202-0414-00			1	FRONT CASE ASSEMBLY
-2	335-1642-00			1	LABEL. FRONT PANEL, MODEL DPO4054
	335-1643-00			1	LABEL. FRONT PANEL, MODEL DPO4104
	335-1641-00			1	LABEL. FRONT PANEL, MODEL DPO4034
-3	366-0860-01			5	KNOB, .685 DIA, SOFT TOUCH
-4	366-0859-01			6	KNOB, .470 DIA, SOFT TOUCH
-5	366-0861-01			2	KNOB, .925 DIA, SOFT TOUCH
-6	366-0865-00			1	KNOB, JOG
-7	358-0883-00			1	BUSHING (JOG SHUTTLE KNOB)
-8	366-0867-01			1	KNOB, SHUTTLE
-9	335-1653-00			1	LABEL. FRONT PANEL, OVERLAY, RUSSIAN
	335-1652-00			1	LABEL. FRONT PANEL, OVERLAY, KOREAN
	335-1651-00			1	LABEL. FRONT PANEL, OVERLAY, STD CHINESE
	335-1650-00			1	LABEL. FRONT PANEL, OVERLAY, SIM CHINESE
	335-1649-00			1	LABEL. FRONT PANEL, OVERLAY, PORTUGUESE
	335-1648-00			1	LABEL. FRONT PANEL, OVERLAY, JAPANESE
	335-1647-00			1	LABEL. FRONT PANEL, OVERLAY, SPANISH
	335-1646-00			1	LABEL. FRONT PANEL, OVERLAY, GERMAN
	335-1645-00			1	LABEL. FRONT PANEL, OVERLAY, ITALIAN
	335-1644-00			1	LABEL. FRONT PANEL, OVERLAY, FRENCH
10	335-1395-00			1	LABEL. FRONT PANEL, 4CH
11	200-4418-00			1	COVER; OPTION KEY DOOR,0.7270 X 1.2250 X 0.310,PC/ ABS,FR110,SILVER GRAY
12	260-2813-01			1	SWITCH,KEYPAD;ELASTOMERIC FRONT PANEL
13	211-1174-00			9	SCREW,MACHINE; W/HEAVY PATCH THREADLOCKING MATERIAL; 6-32 X 0.312 L,PNH,STL CAD PLT,T15
14	872-0005-00			1	FRONT PANEL BOARD, 4 CH
15	335-1359-00			1	MARKER, FRONT PANEL, I/O
16	348-1860-00			2	GASKET, ELEC; CONDUCTIVE URETHANE FOAM
17	441-2378-00			1	CHASSIS;FRONT; SAFETY CONTROLLED
18	650-4715-01			1	ASSEMBLY, LCD DISPLAY
19	174-5014-00			1	CABLE ASSY,SP;DISPLAY DATA,FLAT FLEX
20	211-1174-00			4	SCREW,MACHINE; W/HEAVY PATCH THREADLOCKING MATERIAL; 6-32 X 0.312 L,PNH,STL CAD PLT,T15

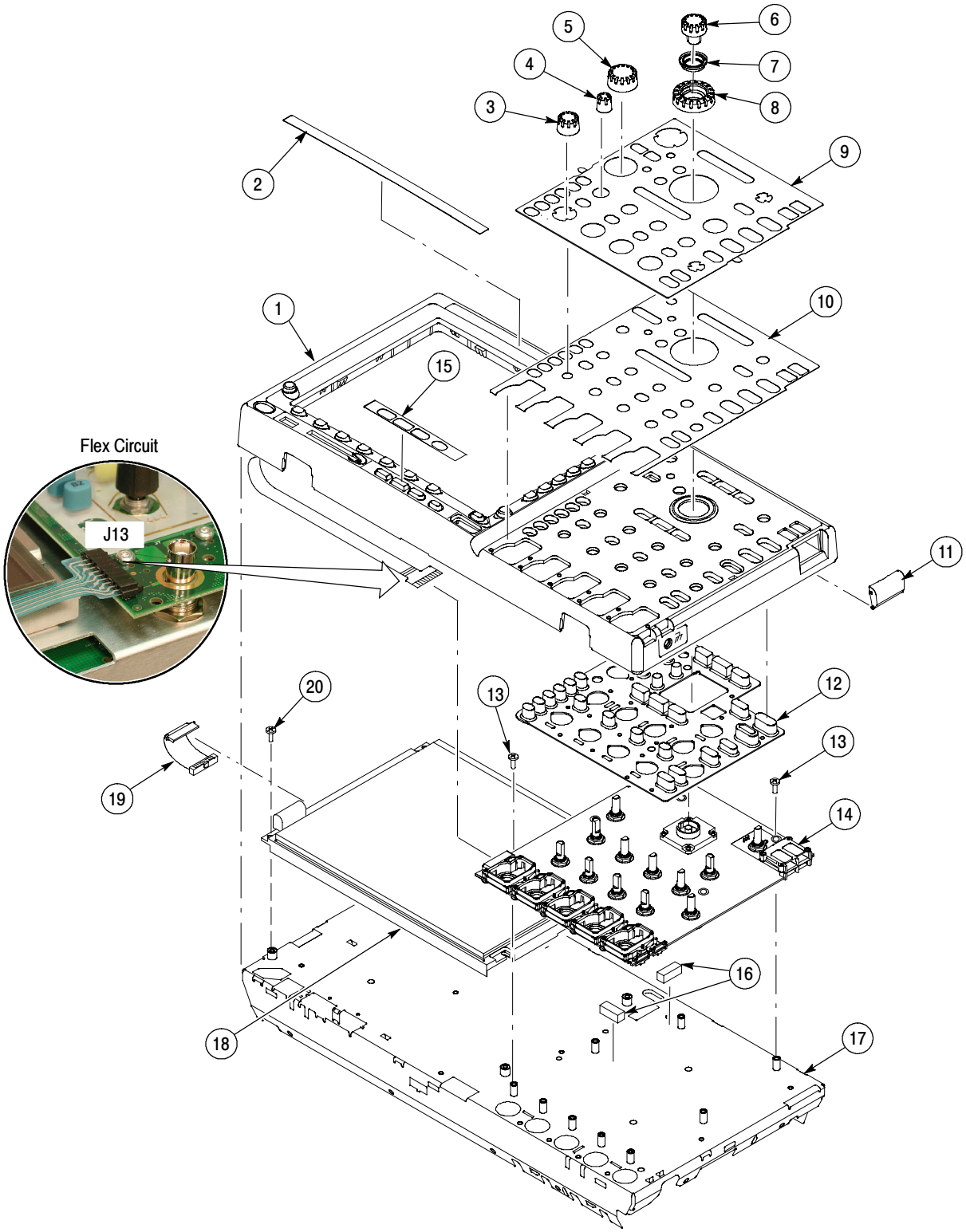

Figure 5-3: Exploded view: MSO4000 front panel and display, 4-channel instruments

Replaceable Parts List: DPO4000 front panel and display, 2 channel

Fig. & index number	Tektronix part number	Serial no. effective	Serial no. discont'd	Qty	Name & description
5-4					DPO4000 Front Panel and Display, 2 Channel
-1	335-1189-00			1	LABEL. FRONT PANEL, MODEL DPO4032
-2	335-1185-00			1	MARKER,IDENT;LABEL,FRONT PANEL,2CH
-3	260-2812-01			1	SWITCH,KEYPAD;ELASTOMERIC FRONT PANEL
-4	872-0004-00			1	CIRCUIT BOARD; FRONT PANEL, 2 CHANNEL
-5	200-4906-00			2	COVER;BNC FILLER
-6	366-0860-01			3	KNOB, .685 DIA, SOFT TOUCH
-7	366-0859-01			4	KNOB, .470 DIA, SOFT TOUCH

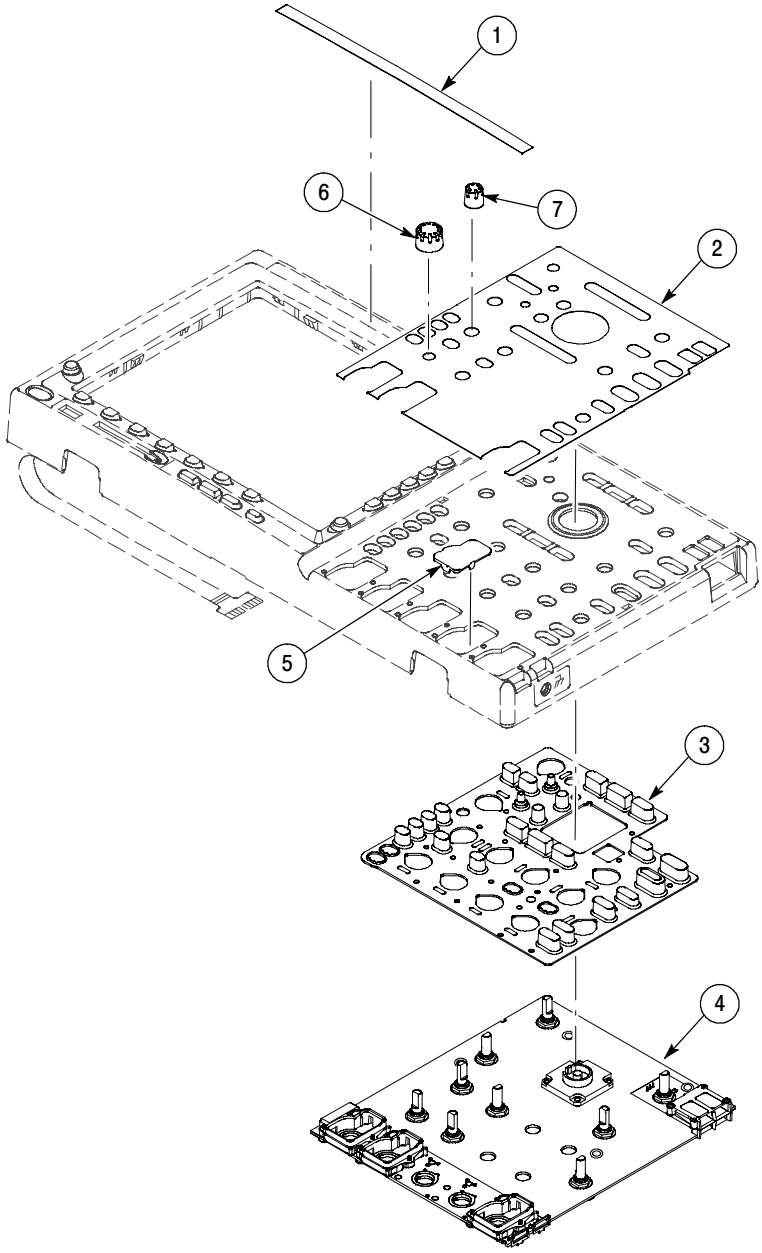

Figure 5- 4: Exploded view: DPO4000 front panel and display, 2-channel instruments

Replaceable Parts List: MSO4000 front panel and display, 2 channel

Fig. & index number	Tektronix part number	Serial no. effective	Serial no. discont'd	Qty	Name & description
5-5					MSO4000 Front Panel and Display, 2 Channel
-1	335-1640-00			1	LABEL. FRONT PANEL, MODEL MSO4032
-2	335-1397-00			1	MARKER,IDENT;LABEL,FRONT PANEL,2CH
-3	260-2814-01			1	SWITCH,KEYPAD;ELASTOMERIC FRONT PANEL
-4	872-0004-00			1	CIRCUIT BOARD; FRONT PANEL;2 CHANNEL
-5	200-4906-00			2	COVER;BNC FILLER
-6	366-0860-01			3	KNOB, .685 DIA, SOFT TOUCH
-7	366-0859-01			4	KNOB, .470 DIA, SOFT TOUCH

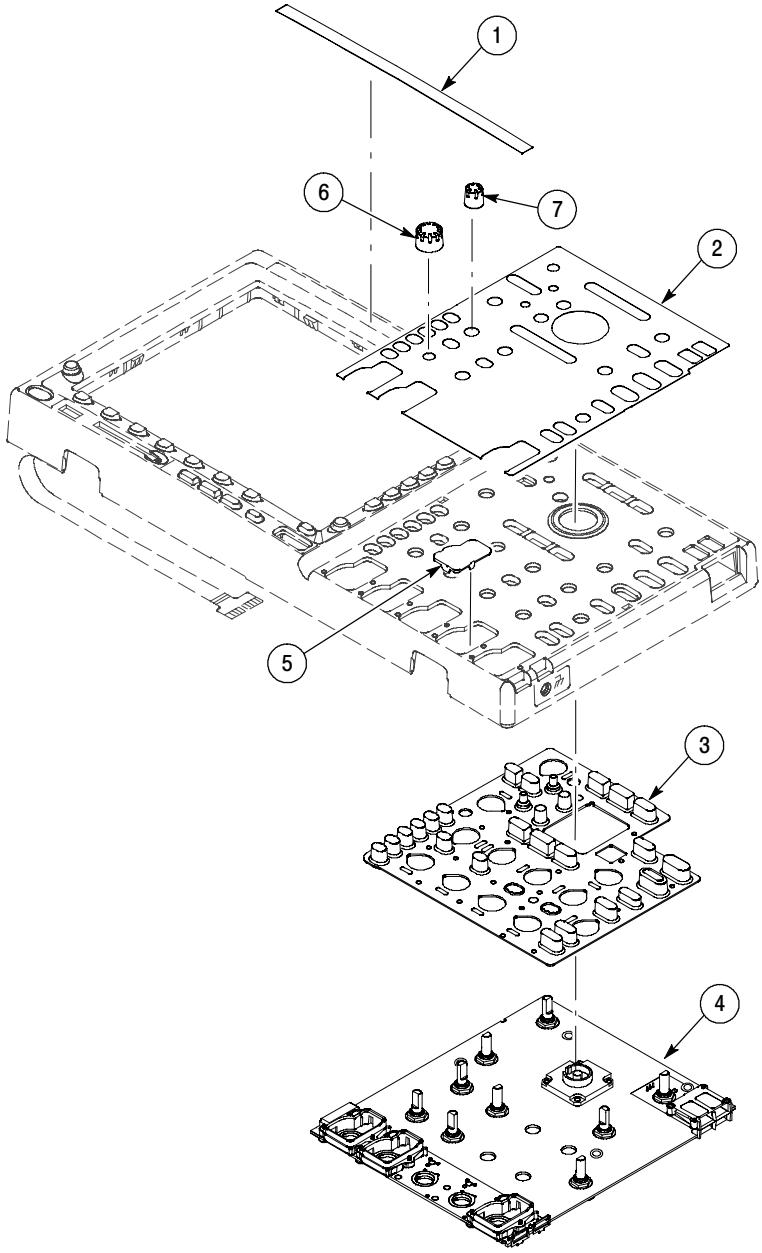

Figure 5- 5: Exploded view: MSO4000 front panel and display, 2-channel instruments

Replaceable Parts List: DPO4000 Power Supply and I/O board

Fig. & index number	Tektronix part number	Serial no. effective	Serial no. discont'd	Qty	Name & description
5-6					DPO4000 Power Supply and I/O Board
-1	407-5019-01			1	BRACKET;POWER SUPPLY COVER
-2	211-1198-00			19	SCREW,MACHINE; 6-32 X 0.250,PNH,STL,CDPL,T-15 TORX
-3	335-1655-00			1	SERIAL NUMBER LABEL
-4	119-7037-00			1	FAN,TUBEAXIAL; 12VDC,0.09A,1.4W,19 CFM,4000RPM,31DBA,60MM X 60MM X 25MM,W/7IN LEADS & CONNECTOR,TACH OUT
-5	650-4939-02			1	POWER SUPPLY SUB ASSEMBLY;DOMESTIC
-6	366-0844-00			1	PUSH BUTTON;POWER; SAFETY CONTROLLED
-7	672-1785-01			1	I/O BOARD
-8	335-1213-01			1	MARKER,IDENT;LABEL,REAR PANEL,LEFT
-9	335-1738-00			1	MARKER,IDENT;LABEL,REAR PANEL, RIGHT
10	337-4378-00			1	SHIELD;INSULATOR,ELECTRICAL
11	131-6643-00			1	GROUNDING CLIPS

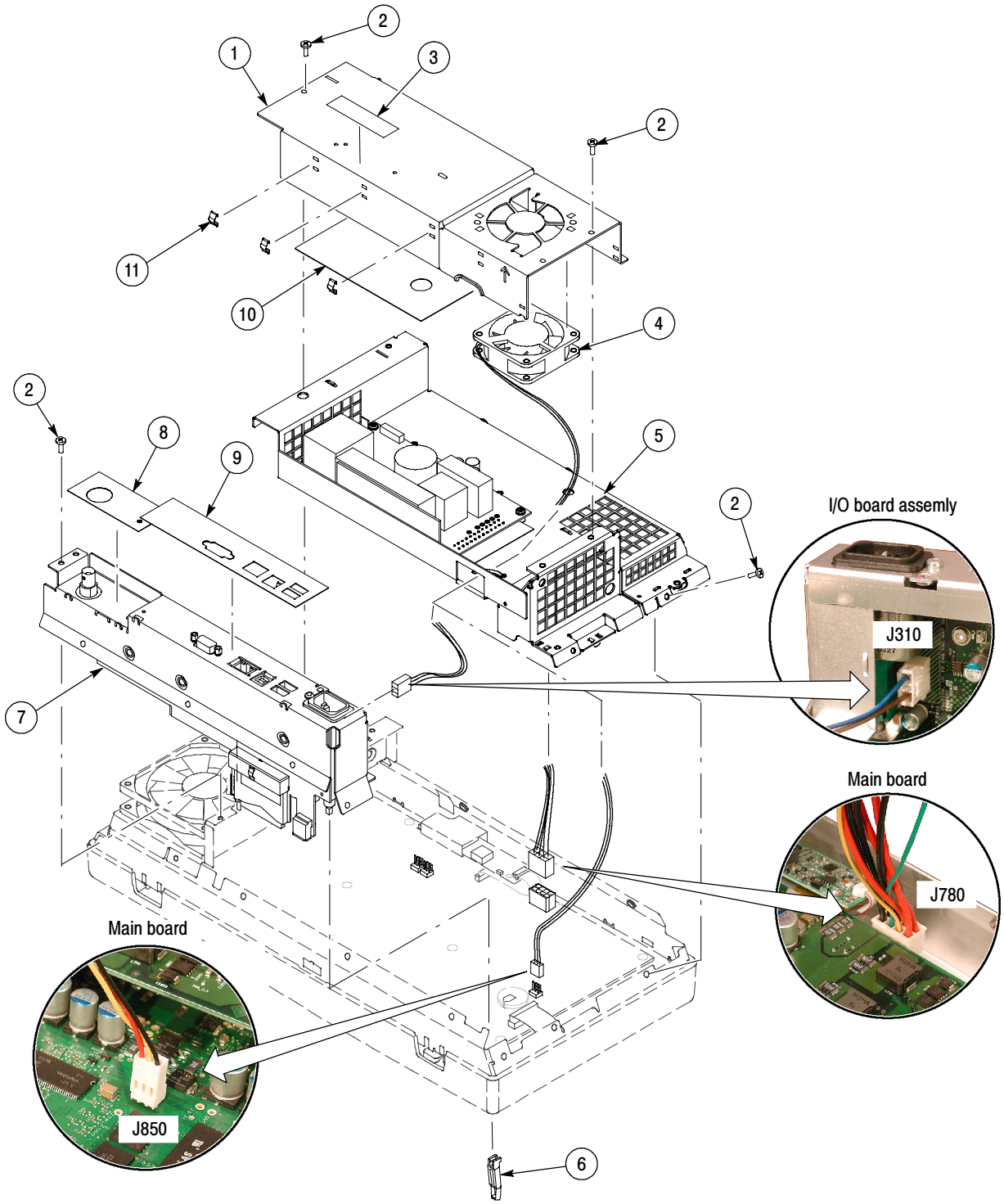

Figure 5-6: Exploded view: DPO4000 Power Supply and I/O board

Replaceable Parts List: MSO4000 Power Supply and I/O board

Fig. & index number	Tektronix part number	Serial no. effective	Serial no. discont'd	Qty	Name & description
5-7					MSO4000 Power Supply and I/O Board
-1	407-5019-01			1	BRACKET;POWER SUPPLY COVER
-2	211-1198-00			19	SCREW,MACHINE; 6-32 X 0.250,PNH,STL,CDPL,T-15 TORX
-3	335-1655-00			1	SERIAL NUMBER LABEL
-4	119-7223-00			1	FAN,TUBEAXIAL; 12VDC,0.09A,1.4W,19 CFM,4000RPM,31DBA,60MM X 60MM X 25MM,W/7IN LEADS & CONNECTOR,TACH OUT
-5	650-4939-02			1	POWER SUPPLY SUB ASSEMBLY;DOMESTIC
-6	366-0844-00			1	PUSH BUTTON;POWER; SAFETY CONTROLLED
-7	672-1785-01			1	I/O BOARD
-8	335-1213-01			1	MARKER,IDENT;LABEL,REAR PANEL,LEFT
-9	335-1738-00			1	MARKER,IDENT;LABEL,REAR PANEL, RIGHT
10	337-4378-00			1	SHIELD;INSULATOR,ELECTRICAL
11	131-6643-00			1	GROUNDING CLIPS

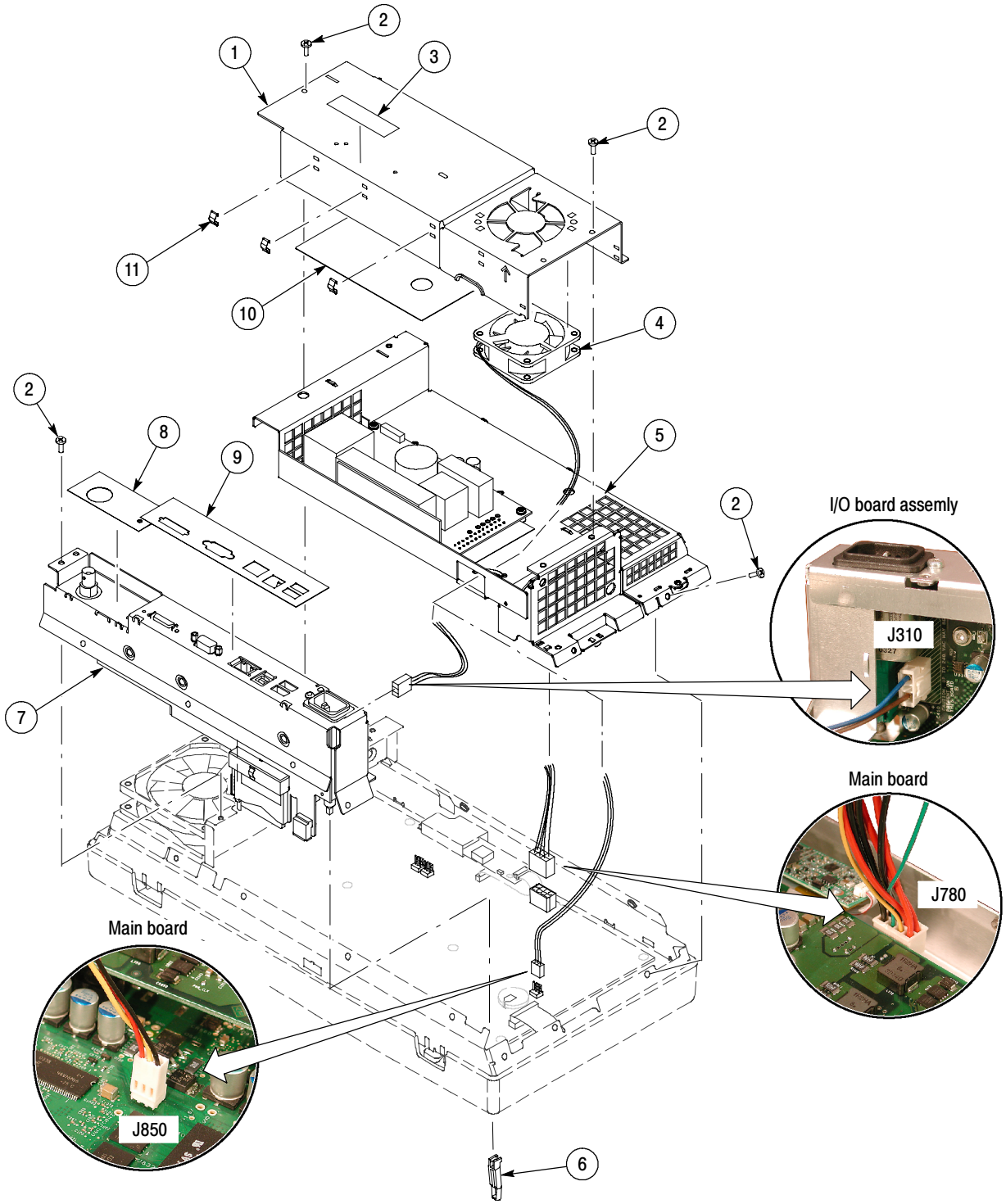

Figure 5-7: Exploded view: MSO4000 Power Supply and I/O board

Replaceable Parts List: DPO4000 main board, inverter board, and side fans

Fig. & index number	Tektronix part number	Serial no. effective	Serial no. discont'd	Qty	Name & description
5-8					DPO4000 Main board, Inverter Board, Side Fans
-1	650-4937-00			1	FAN TRAY ASSEMBLY
-2	119-6806-00			1	POWER SUPPLY; INVERTER,1200VAC NO-LOAD & 600VAC @ 85KOHM LOADED OUTPUT
-3	211-1143-00			2	SCREW,PT; K35-1.57,PAN HEAD,T-15
-4	407-5113-00			1	BRACKET,PCB;BACKLIGHT BOARD
-5	174-5015-00			1	CABLE ASSY,SP;INVERTER POWER,FLAT FLEX
-6	671-5843-00			1	CKT BD ASSY;ACQUISITION BOARD,4 CHANNEL, 1GHz (DPO4104 ONLY)
	671-5959-00			1	CKT BD ASSY;ACQUISITION BOARD,4 CHANNEL, 500MHZ (DPO4054 ONLY)
	671-5961-00			1	CKT BD ASSY;ACQUISITION BOARD,4 CHANNEL, 350MHZ (DPO4034 ONLY)
	671-5960-00			1	CKT BD ASSY;ACQUISITION BOARD,2 CHANNEL, 350MHZ (DPO4032 ONLY)
-7	211-1198-00			6	SCREW,MACHINE; 6-32 X 0.250,PNH,STL,CDPL,T-15 TORX DR
-8	174-5014-00			1	CABLE ASSY,SP;DISPLAY DATA,FLAT FLEX
-9	211-1174-00			13	SCREW,MACHINE; W/HEAVY PATCH THREADLOCKING MATERIAL; 6-32 X 0.312 L,PNH,STL CAD PLT,T15

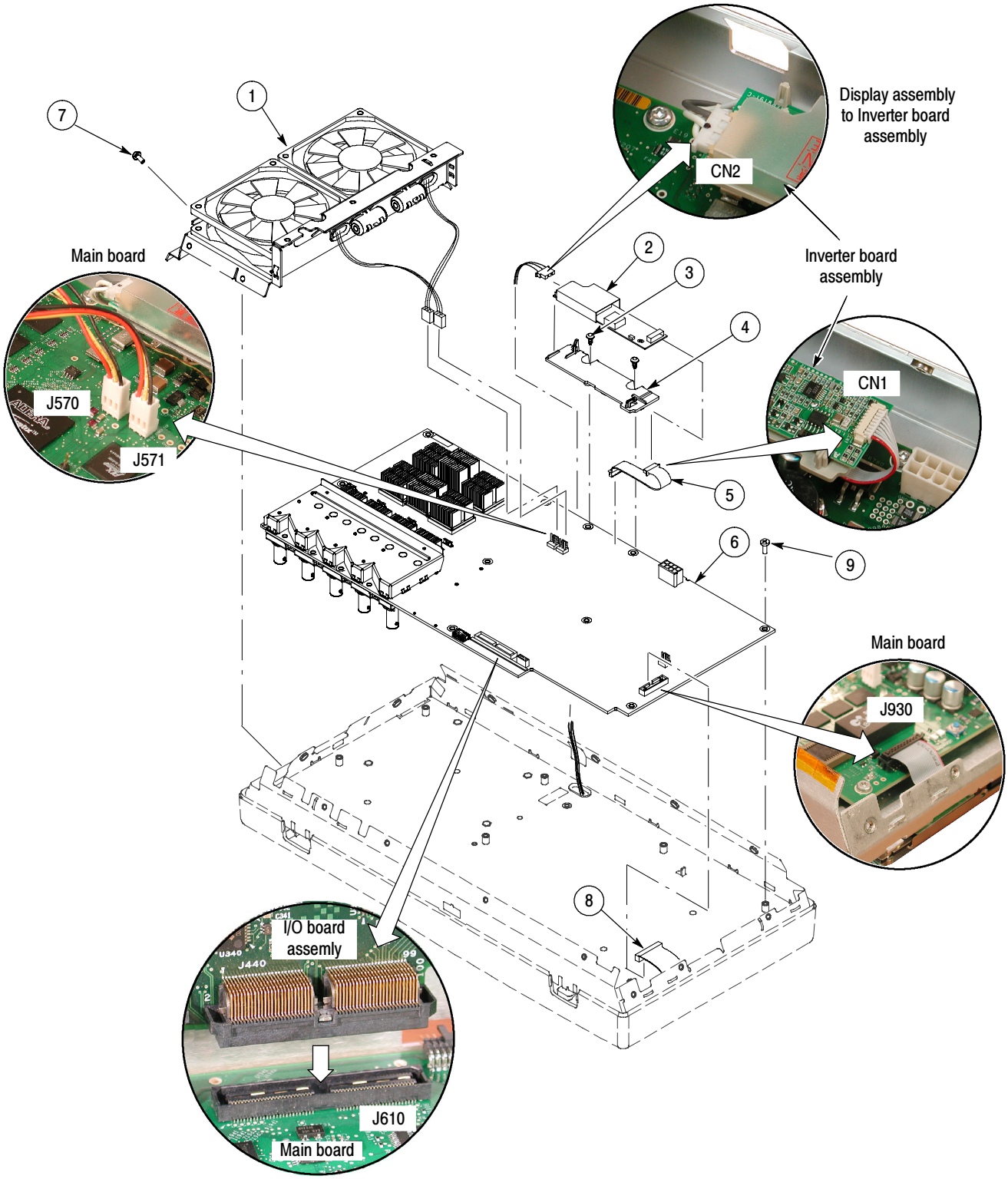

Figure 5-8: Exploded view: DPO4000 Main board, Inverter board, and side fans

Replaceable Parts List: MSO4000 Main board, Inverter board, and side fans

Fig. & index number	Tektronix part number	Serial no. effective	Serial no. discont'd	Qty	Name & description
5-9					MSO4000 Main board, Inverter board, side fans
-1	650-5077-00			1	FAN TRAY ASSEMBLY
-2	119-6806-00			1	POWER SUPPLY; INVERTER,1200VAC NO-LOAD & 600VAC @ 85KOHM LOADED OUTPUT
-3	211-1143-00			2	SCREW,PT; K35-1.57,PAN HEAD,T-15
-4	407-5113-00			1	BRACKET,PCB;BACKLIGHT BOARD
-5	174-5015-00			1	CABLE ASSY,SP;INVERTER POWER,FLAT FLEX
-6	671-5988-00			1	CIRCUIT BD ASSY; MAIN BOARD, (MSO4104)
	671-6144-00			1	CIRCUIT BD ASSY;500MHZ 4 CHANNEL, (MSO4054)
	671-6288-00			1	CIRCUIT BD ASSY;500MHZ 4 CHANNEL, MSO4034)
	671-6145-00			1	CKT BD ASSY; 2 CHANNEL, (MSO4032)
-7	211-1198-00			6	SCREW,MACHINE; 6-32 X 0.250,PNH,STL,CDPL,T-15 TORX DR
-8	174-5014-00			1	CABLE ASSY,SP;DISPLAY DATA,FLAT FLEX
-9	211-1174-00			13	SCREW,MACHINE; W/HEAVY PATCH THREADLOCKING MATERIAL; 6-32 X 0.312 L,PNH,STL CAD PLT,T15
10	351-1115-00			1	PROBE GUIDE

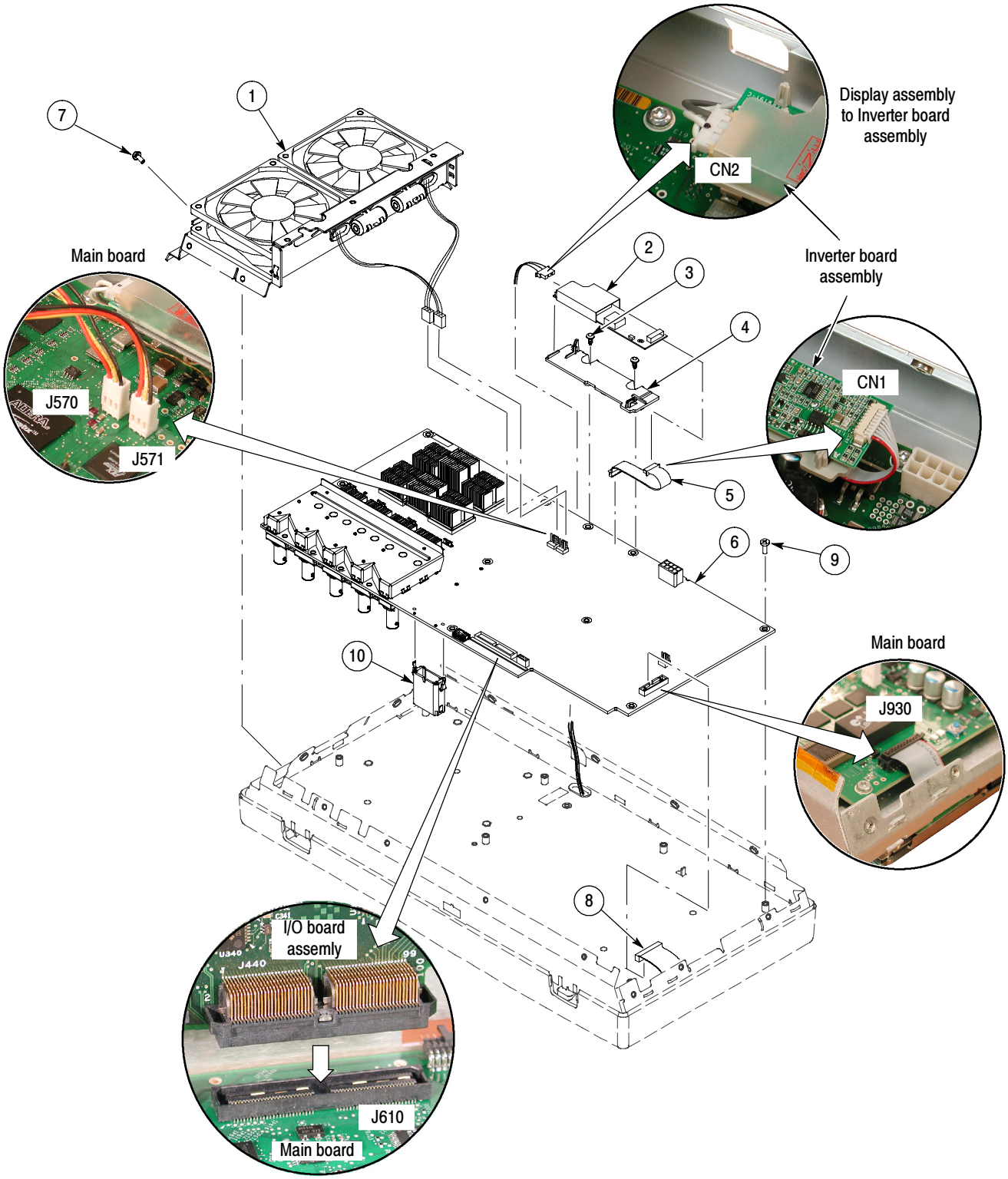

Figure 5-9: Exploded view: MSO4000 Main board, Inverter board, and side fans

Replaceable Parts List: DPO4000 and MSO4000 Accessories

Fig. & index number	Tektronix part number	Serial no. effective	Serial no. discont'd	Qty	Name & description
No Image					Accessories
	161-0066-09			1	CA ASSY,PWR:3,1.0MM SQ,250V/10A,2.5 M (OPTION A1 - UNIVERSAL EURO)
	161-0400-00			1	CA ASSY,PWR:3,1.0MM SQ,250V/10A,2.5 M (OPTION A11 - INDIA)
	161-0298-00			1	CA ASSY,PWR:3,1.0MM SQ,250V/10A,2.5 M (OPTION A6 - JAPAN)
	161-0066-00			1	CABLE ASSY,PWER,:3,18 AWG,92 L (STANDARD CABLE; OPTION A0)
	161-0066-10			1	CABLE ASSY,PWR; 3,1.0 MM SQ,250V/10A,2.5 METER,STR,IEC320,RCPT X 13A,FUSED UK PLUG(13A FUSE), SAFETY CONTROLLED (OPTION A2 - UNITED KINGDOM)
	161-0066-13			1	CABLE ASSY,PWR; 3,1.0 MM SQ,250V/10A,2.5 METER,STR,IEC320,RCPT,SAFETY CONTROLLED, INSULATED PINS (OPTION A3 - AUSTRALIA)
	161-0154-00			1	CA ASSY,PWR; 3,1.0MM SQ,250V/10A,2.5 METER,STR,IEC320,RCPT,SAFETY CONTROLLED (OPTION A5 - SWITZERLAND)
	161-0304-00			1	CABLE ASSY,PWR; 3,1.0MM SQ,250V/10A,2.5 METER,STR,IEC320,3C CERTIFICATION,RCPT,SAFETY CONTROLLED (OPTION A10 - CHINA)
	016-1967-00			1	POUCH, PLASTIC:POUCH
	020-2662-00			1	MSO4000 ACCESSORY PACKAGE P6516